Object Membership – Basic Structure

An abstract structure is described which provides a general model for the innermost core of object-oriented programming and modelling. The structure is called *basic structure* of ϵ and is introduced in the signature $(\underline{O}, \epsilon, \overline{\epsilon}^{(*)}, \underline{r}, .ec, .\varepsilon\wp)$ with a single sort $\underline{O}$ of objects. • ϵ is the object membership relation, an indirect counterpart to set membership. • $\overline{\epsilon}^{(*)}$ is a left-infinite sequence $\ldots, \overline{\epsilon}^{-1}, \overline{\epsilon}^{0}, \overline{\epsilon}^{1}$ of relations, whose 0-th member is $\leq$ – the inheritance relation, corresponding to inclusion between sets. The 1-indexed member is the power membership relation $\overline{\epsilon}$ which, if $.ec$ is total, equals the composition $(.ec) \circledcirc (\leq)$ (in general, $\overline{\epsilon}$ is an abstraction of this composition). • $\underline{r}$ is the inheritance root, a distinguished object containing all objects, including $\underline{r}$ itself, as members in ϵ, thus playing the role of the universal set. • $.ec$ is the powerclass partial map, corresponding to a relativized powerset operator. • $.\varepsilon\wp$ is the primary singleton partial map, corresponding to set membership between non-singleton sets and singleton sets.

As a key characteristics induced by the structure, each object is assigned a rank between 0 and a fixed limit ordinal $\underline{\varpi}$. Objects with rank $\underline{\varpi}$ are *unbounded*, the remaining ones are *bounded*. For unbounded objects x, the images of $\{x\}$ under ϵ and $\overline{\epsilon}$ are coincident. Therefore, object membership is formed as the union

$$(\epsilon) = (\epsilon) \cup (\overline{\epsilon})$$

where ϵ is the domain-restriction of ϵ to bounded objects.

It is shown that every basic structure is a substructure of an $(\underline{\varpi}+1)$-superstructure and thus can be embedded in the von Neumann universe of sets. The inheritance root $\underline{r}$ appears as the $\underline{\varpi}$-th cumulation of urelement-like sets. The above equality for object membership is expressed as

$x \epsilon y$ iff $x \in y$ or $\mathbb{P}(x) \cap \underline{r} \subseteq y$. ($\mathbb{P}(x)$ stands for the powerset of x.)

Author

Ondřej Pavlata
Jablonec nad Nisou
Czech Republic
atalon (at) atalon (dot) cz

Document date

Initial release March 12, 2015
Last major release March 12, 2015
Last update April 8, 2015

HTML version

An HTML version of this document is available at http://www.atalon.cz/om/object-membership/basic/ .
Note: The HTML version is regarded as primary and can be more up-to-date. Moreover, some proofs are excluded from the PDF version.

Warning

This document has been created without any prepublication review except those made by the author himself.

Table of contents

Introduction
- The objective
- Main correspondence
- Basic structures from superstructures
- Complete structure
- Completion

- Embedding into the von Neumann universe

Sample structure

- Power membership
- The ϵ-diamond
- Specialities of the sample
- Powerclasses and singletons
- Metalevels
- Rank

Preliminaries

- Main notational conventions
- Ordinal numbers
- Cardinal numbers
- Natural numbers
- Integers
- Well-foundedness
- Rank
- Limited rank
- Fixing a limit ordinal ϖ

Basic structure

- ϵ5-structure
- Basic structure
- Observations about .ec

Definitions in detail

- Powerclass chains
- Object membership
- Inheritance
- Polars of ≤
- Anti-membership
- Distinguished sets of objects
- Singletons
- Metalevels
- Helix number
- Rank
- Boundedness
- Power instance-of and the .class map

Consistency and completeness

- ϵ-rank and ϵ-rank
- Groundedness
- Extensional consistency
- ϵ-levelling
- Powerclass consistency
- Combined consistency
- Free leaf
- Completeness

Pre-basic structure

- Pre-basic structure
- Groundedness vs ϵ-rank

Metaobject structure

- Metaobject structure
- The correspondence
- Grounded metaobject structure

Monotonic structures

- Monotonic structure
- Monotonic primary structure
- Membership-based monotonic structure
- Example
- Monotonic eigenclass structure

Powerclass-based structures

- Powerclass-based structure
- Powertype-based structure

Extensions

- Faithful extension
- Embedding
- Summary of provided extensions

Ranking product

- Example
- Ranking product
- Embedding of pre-basic structures
- Rank in pre-basic structures

Powerclass completion

- Powerclass completion
- The powerclass completion theorem

Singleton completion

- Primary singleton completion
- The singleton completion theorem

Extensional pre-completion

- Extensional pre-completion
- The extensional pre-completion theorem

Rank pre-completion

- The omissible case ϖ = ω
- Rank pre-complete structure
- Rank pre-completion
- The rank pre-completion theorem

ϵ-structure

- ϵ-structure
- ϵ-rank

ϵ-structure

- ϵ-structure
- ϵ-ϵ-structure
- Correspondence of ϵ-structures and ϵ-structures
- Disallowed structures
- Bounded ϵ-ϵ-structures

Pre-complete structure of ϵ

- Pre-complete structure of ϵ
- Pre-complete structure via ϵ
- Alternative formulation of (ep~7)
- The pre-completion theorem
- Pre-completion

Complete structure of ϵ

- Adding a bottom
- The union map
- Stages
- Existence and uniqueness
- Powerclass cumulation
- The .ℰc(⋆) operator

Completion

- Embedding sequence
- The embedding theorem

Superstructures

- Superstructure
- Definitional extension

Embedding of superstructures

- Strata and the bottom stratum operator
- Regularly cumulated objects
- Cardinality assertion
- Embedded (α+1)-superstructure
- Embedded basic structure

Embedding into the von Neumann universe of sets
▸ Powerset cumulation ▸ The von Neumann hierarchy ▸ The set-representation theorem
Union in basic structures
▸ The (b~9) axiom ▸ Rank adjustment ▸ Union 1-completion ▸ Completion conjecture
▸ References ▸ License

Introduction

The standard Zermelo-Fraenkel set theory with the axiom of choice (ZFC) can be viewed as a one-sorted structure $(\mathbb{U}, \in)$ where $\mathbb{U}$ is the universal class of all sets and $\in$ is the relation symbol of set membership, the only non-logical symbol of the original language of ZFC. Virtually all texts about set theory introduce a definitional extension that includes the following symbols (with $\varnothing$ / $\mathbb{P}$ / $\setminus$ having alternatives, e.g. 0 / $\wp$ / $-$):

$\subseteq$, $\varnothing$, $\mathbb{P}$, $\setminus$, $\bigcup$, $\cup$ $\bigcap$, $\cap$,

where $\subseteq$ is a relation symbol of set inclusion, $\varnothing$ is a constant symbol for the empty set, $\mathbb{P}$ and $\bigcup$ are unary function symbols for powerset and union, respectively, $\setminus$, $\cup$ and $\cap$ are binary function symbols for difference, union and intersection, respectively, and $\bigcap$ is a unary partial function symbol for set intersection. There are also "composite" function symbols for enumerated sets and tuples that use curly brackets and parentheses, respectively:

$\{\,,\,\ldots\,,\,\}$ and $(\,,\,\ldots\,,\,)$.

In particular, $\{x\}$ is the singleton of x and (x,y) is the ordered pair of x and y having x as the first coordinate.

All the additional symbols denote distinguished sets or relations between sets (considering functions as right-unique relations) that are implicitly given by $\in$. The uniqueness of the definition of $\varnothing$, $\mathbb{P}(x)$, $x \setminus y$, $\bigcup x$, …, $x \cap y$, $\{x\}$ or (x,y) for given sets x, y as well as the antisymmetry of $\subseteq$ is ensured by the extensionality axiom which says that sets x, y are equal if and only if they have the same members:

$x = y \quad \leftrightarrow \quad$ for every set a, $a \in x \leftrightarrow a \in y$.

In another words, a set is identified by its members. For instance, the set $\mathbb{P}^6(\varnothing)$ (the 6-th application of the powerset operator to the empty set which is the partial von Neumann universe of rank 6) is given by its 2^{65536} members. [15a]

Let us single out the four relations between sets which are referred to by the symbols involved in the following two equivalences. For every sets x, y,

The 2x2 core of set theory

$$\boxed{\begin{aligned} x \in \mathbb{P}(y) &\leftrightarrow \quad x \subseteq y, \\ x \in y \quad &\leftrightarrow \{x\} \subseteq y. \end{aligned}}$$

That is, the singled out relations are (1) set membership ($\in$), (2) set inclusion ($\subseteq$), (3) the powerset map ($x \mapsto \mathbb{P}(x)$) and (4) the singleton map ($x \mapsto \{x\}$). Note that (3) and (4) are functional subrelations of $\in$. The distinction of (1)–(4) can be made in two steps:

I. Single out $\in$ and $\subseteq$ as the two most fundamental relations of set theory.
II. Single out $\mathbb{P}$ and $x \mapsto \{x\}$ as the two fundamental maps that provide a connection between $\in$ and $\subseteq$.

Observe that apart from the equality symbol $=$ (and apart from symbols based on $\in$ or $\subseteq$ like e.g. $\notin$, $\ni$ or $\subset$) there is no obvious *third* most fundamental relational symbol of set theory. We can therefore regard (1)–(4) as a "core" definitional extension, the *2x2 core* of set theory.

This document shows that the above 2x2 core has an abstract counterpart that can be regarded as the core of object technology. Most object-oriented programming languages (e.g. Java, C++, Python, CLOS or Perl) or ontology languages (e.g. RDF Schema or OWL) support just $\in$ and $\subseteq$ and usually call the counterpart relations *instance-of* and *inheritance*, respectively. However, there are significant examples of programming languages which support links between objects that correspond to the powerset map or to its inverse [9]:

in Smalltalk-80 and Objective-C:	class $x \mapsto$ the implicit metaclass of x,
in Ruby:	object $x \mapsto$ the eigenclass of x,
in JavaScript:	the prototype of $y \longleftarrow$ constructor y.

There are also examples of languages that support the singleton map: Dylan, Julia and Scala.

The objective

The objective of this document is to provide a connection between object technology and set theory according to the following diagram:

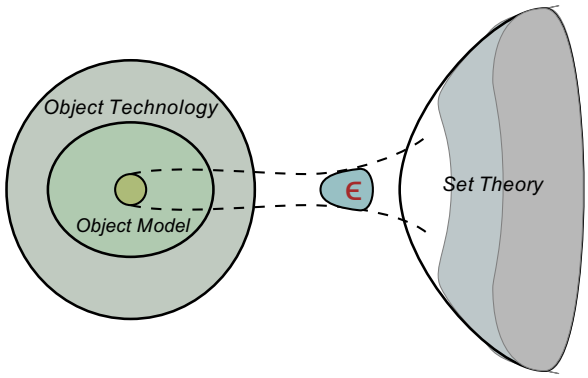

The connection is established through the family of *basic structures* (shown by the small region labelled with the ϵ symbol) which encompass abstract counterparts of the four distinguished set-theoretic relations. It is shown how

- core parts of object models of established languages like Ruby or Python arise as special cases of basic structures, and, on the other hand, how
- basic structures can be gradually completed to superstructures, which can be considered a generalization of partial von Neumann universe allowing more than one element in the ground stage.

Main correspondence

By simplification, main correspondence between the 2x2 core of set theory and the core of object technology can be expressed as follows.

(Zermelo-Fraenkel) For every **sets** x, y

$$\boxed{\begin{aligned} x \in \mathbb{P}(y) &\leftrightarrow x \subseteq y, \\ x \in y \quad &\leftrightarrow \{x\} \subseteq y \text{ or } \mathbb{P}(x) \subseteq y \end{aligned}}$$

(set membership) $\in$ $\rightsquigarrow$ ϵ (object membership)
(set inclusion) $\subseteq$ $\rightsquigarrow$ $\leq$ (inheritance)
(powerset) $\mathbb{P}(x)$ $\rightsquigarrow$ $x.ec$ (powerclass)
(singleton set) $\{x\}$ $\rightsquigarrow$ $x.\varepsilon c$ (singleton)

$$\Updownarrow$$

(Morse-Kelley) For every **classes** x, y

$$\boxed{\begin{aligned} x \epsilon \mathbb{P}(y) &\leftrightarrow x \subseteq y, \\ x \epsilon y \quad &\leftrightarrow \{x\} \subseteq y \text{ or } \mathbb{P}(x) \subseteq y \end{aligned}}$$

$$\leftrightarrow$$

(Object technology) For every **objects** x, y

$$\boxed{\begin{aligned} x \epsilon y.ec &\leftrightarrow x \leq y, \\ x \epsilon y \quad &\leftrightarrow x.\varepsilon c \leq y \text{ or } x.ec \leq y \end{aligned}}$$

That is, ϵ, $\leq$, $.ec$ and $.\varepsilon c$ are the abstract counterparts of set membership, set inclusion, powerset and singleton set maps, respectively. The correspondence is obtained via the following steps.

i. "Adjust" the equivalence for $x \in y$ by adding "or $\mathbb{P}(x) \subseteq y$" on the right side. Since in ZFC, $\{x\} \subseteq \mathbb{P}(x)$ for every set x, the adjusted equivalence is equivalent to the original one.
ii. Switch to Morse-Kelley set theory [7] – change the universe of discourse from sets to classes. Accordingly,
    - the singleton map becomes strictly partial ($*$),
    - let the $\mathbb{P}$ map be total by extending its semantics from "powerset" to "powerclass",
    - change the $\in$ symbol to ϵ in order to reflect the semantic change of $\mathbb{P}$.
iii. Change the universe from classes to objects and introduce ϵ , $\leq$, $.ec$ and $.\varepsilon c$ as abstractions of ϵ, $\subseteq$, $\mathbb{P}$ and $x \mapsto \{x\}$, respectively.

Notes:

- ($*$) In [7] the singleton map is total – $\{x\}$ equals the universal class whenever x is a proper class. Interestingly, this extension would not change the definition of ϵ.

- We further introduce slight adjustment of the definition of "powerclass" as known from set theory [4] [6], shifting the meaning from "the class of subsets of x" to "the class of non-empty subsets of x". As a result, there will be no fixed point of $.ec$.

Basic structures from superstructures

Basic structures arise by abstraction of suitable partial universes of well-founded sets. A brief specification of basic structures is provided via the following abstraction steps.

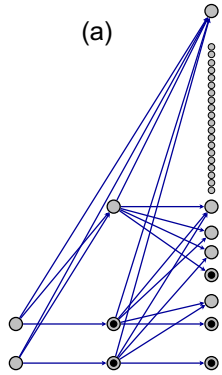

1. Start with an $(\varpi+1)$-superstructure (O, ϵ). Let ϖ be a limit ordinal and let ϵ be a well-founded relation on a set O of *objects* such that (1) $r(O)$, the *rank* of O w.r.t. ϵ, equals $\varpi+1$ and (2) for every non-empty subset X of O satisfying $r(X) \leq \varpi$ there is a unique object x whose pre-image under ϵ equals X.

   The (a) diagram on the right partially shows a restriction of an $(\varpi+1)$-superstructure to objects whose rank is less than 3 and thus form the *third stage*. Objects are depicted as circles and are aligned into columns according to their rank. There are just two objects with zero rank – the *terminals* which form the first stage (*ground stage*). The ϵ relation is represented by blue arrows.

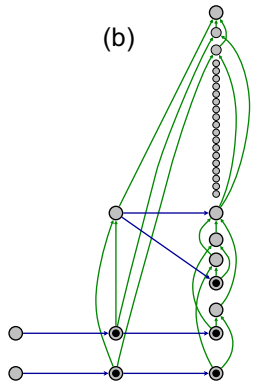

2. Make a definitional extension of (O, ϵ). Define r, $\leq$, $.ec$ and $.\varepsilon c$ as follows. Use $X.\ni$ and $x.\ni$ for the pre-image of sets X and $\{x\}$ of objects under ϵ.
   - Let r be the *inheritance root* – the unique object x such that
     $x.\ni = O.\ni$.
   - Let $\leq$ be the *inheritance relation* defined by
     $x \leq y \;\leftrightarrow\; x = y$ or $\emptyset \neq x.\ni \subseteq y.\ni$.
   - Let $.ec$ be the *powerclass map* – the unique map $O \to O$ such that
     $u \epsilon x.ec \;\leftrightarrow\; u \leq x$ and $u \in O.\ni$.
   - Let $.\varepsilon c$ be the *singleton map* – the unique partial map $O \curvearrowright O$ such that
     $x.\varepsilon c = y \;\leftrightarrow\; \{x\} = y.\ni$.

   In particular, $.\varepsilon c$ is a distinguished subrelation of ϵ and so is the restriction of $.ec$ to $O.\ni$. Objects from the range of $.ec$ (resp. of $.\varepsilon c$) are *powerclasses* (resp. *singletons*). In the (a) and (b) diagrams, $.ec$ is represented by horizontal blue arrows and $.\varepsilon c$ by blue arrows pointing to $\odot$ which indicate singletons. The (b) diagram shows the inheritance relation (green arrows, upwards directed) in the reflexive transitive reduction. The reduction of blue arrows in (b) is based on the $(\epsilon) = (.\varepsilon c) \circledcirc (\leq)$ equality (i.e. ϵ equals the composition of the singleton map with inheritance).

3. Define *metaobject structures* as abstraction of $(O, \leq, r, .ec, .\varepsilon c)$. Use the following definitional extension for the axiomatization. Let ϵ, $\bar{\epsilon}$, ϵ and ϵ^{-1} be relations between objects such that
   $(\epsilon) = (.\varepsilon c) \circledcirc (\leq)$ is the *bounded membership*, $(x \epsilon y \leftrightarrow x.\varepsilon c \leq y)$
   $(\bar{\epsilon}) = (.ec) \circledcirc (\leq)$ is the *power membership*, $(x \bar{\epsilon} y \leftrightarrow x.ec \leq y)$
   $(\epsilon) = (\epsilon) \cup (\bar{\epsilon})$ is the *(object) membership*,
   $(\epsilon^{-1}) = (\leq) \circledcirc (.ce)$ is the *anti-membership*, with $.ce$ denoting the inverse of $.ec$.

   For every integer i, let
   (ϵ^{i}) (resp. $(\bar{\epsilon}^{i})$) be the i-th relational composition of ϵ (resp. of $\bar{\epsilon}$) with itself whenever $i > 0$,
   $(\epsilon^{i}) = (\bar{\epsilon}^{i})$ be the $-i$-th relational composition of ϵ^{-1} with itself whenever $i < 0$, and let
   $(\epsilon^{0}) = (\bar{\epsilon}^{0}) = (\leq)$.

   Define the *rank* function $.d$ from O to $\varpi+1$ in terms of r and ϵ^{i}. In general, $.d$ differs from the ϵ-rank. Adapt the nomenclature of objects to $.d$. Objects with zero rank are *terminal(s)*, the other *non-terminal(s)*, objects x whose rank is not maximal are *bounded*, the other (such that $x.d = \varpi$) are *unbounded*. As a particular consequence of the definition of $.d$, objects that are non-well-founded in ϵ are unbounded. In the axiomatization, assert that the singleton map $.\varepsilon c$ is defined exactly for bounded objects.

4. Define *basic structures* as abstraction of $(O, \epsilon, \bar{\epsilon}^{(*)}, r, .ec, .\varepsilon\!\!\!\!\!\!\;\;c)$ where $\bar{\epsilon}^{(*)}$ is the left-infinite sequence $\{\bar{\epsilon}^{i} \mid i \in \mathbb{Z}, i \leq 1\}$ and $.\varepsilon\!\!\!\!\!\!\;\;c$ stands for the difference $(.\varepsilon c) \setminus (.ec)$. Define the rank $.d$ of objects by the same prescription as for metaobject structures and preserve the nomenclature. Define ϵ as the domain restriction of ϵ to bounded objects. Obtain $.\varepsilon c$ back from $.\varepsilon\!\!\!\!\!\!\;\;c$ so that

(a) $(.\varepsilon\mathfrak{c}) \subseteq (.\varepsilon c)$, (b) $.\varepsilon c.\varepsilon c = .\varepsilon c.ec$ and (c) $x.\varepsilon c = x.ec$ for every terminal x.

In contrast to metaobject structures, allow $.ec$ and $.\varepsilon\mathfrak{c}$ to be arbitrarily partial, possibly empty. As a consequence, a basic structure might contain only finitely many objects, with $\underline{O} = \{\underline{r}\}$ being the minimum case.

For a natural i, let $.ec(i)$ be the i-th composition of $.ec$ with itself, $.ec(0)$ being the identity on $\underline{O}$. Subsequently, let $.ec(-i)$ be the inverse of $.ec(i)$. In the axiomatization, assert the following:

i. $\overline{\epsilon}$ is a subrelation of ϵ.
ii. Powers of $\overline{\epsilon}$ compose transitively: the composition of $\overline{\epsilon}^i$ with $\overline{\epsilon}^j$ is a subrelation of $\overline{\epsilon}^{i+j}$.
iii. Powers of ϵ compose transitively if they are positive on the left side: $(\epsilon) \circledcirc (\epsilon^i)$ is a subrelation of ϵ^{1+i}.
iv. Powers of $\overline{\epsilon}$ are antisymmetric. The intersection of $\overline{\epsilon}^i$ with its inverse equals $.ec(i)$.
v. Objects from $\underline{O}.\epsilon$ (the range of ϵ) are inheritance descendants of $\underline{r}$.
vi. Every object is in the domain of ϵ, i.e. $\underline{O} = \underline{O}.\ni$.
vii. Singletons and terminals x are minimal w.r.t. $(\epsilon^{-i}) \setminus (\overline{\ni}^i)$ for every natural i and power members: $x.\epsilon = x.\overline{\epsilon}$.
viii. The $.\varepsilon\mathfrak{c}$ map is an injective range-restriction of ϵ and is disjoint with $\overline{\epsilon}$. Moreover, if $x.\varepsilon\mathfrak{c} = y$ then

$$u\ \epsilon^{-i}\ x \leftrightarrow u\ \epsilon^{1-i}\ y \text{ for every object } u \text{ and every natural } i.$$

ix. Reserved.
x. Every object x has a finite *metalevel index*, i.e. x is related to $\underline{r}$ in only finitely many negative powers of ϵ.
xi. Unbounded objects x are power members: $x.\epsilon = x.\overline{\epsilon}$.

Complete structure

The above mentioned $(\underline{\omega}+1)$-superstructures, in an appropriate definitional extension, are themselves a special case of basic structures, called *complete structures*. Main characterization of basic structures w.r.t. set theory can be therefore obtained by comparing $\mathcal{S} = (\underline{O}, \epsilon)$ with $(\mathbb{U}, \in)$. The following observations can be made:

i. In contrast to $\mathbb{U}$ which is a proper class, $\underline{O}$ is a set. This is because basic structures are primarily meant to provide a general model of the core part of object technology *based* on set theory.
ii. There can be more than one object x in the ground stage $\underline{O} \setminus \underline{O}.\epsilon$ of $\mathcal{S}$ (i.e. such that $x.\ni = \varnothing$). As a consequence, $\mathcal{S}$ is only weakly extensional. Ground stage objects are "urelements".
Note: Objects from the ground stage are exactly the *terminal* objects of $\mathcal{S}$. For complete structures, we tend to use this term less frequently than in the general case.
iii. There are *unbounded* objects, most notably $\underline{r}$, that have maximum rank, $\underline{\omega}$, and therefore do not appear in the domain of ϵ.
iv. There is no counterpart to $\varnothing$, the empty set. Ground stage objects are incomparable in the strict inheritance $<$ to any object.
v. On the other hand, the inheritance root $\underline{r}$ being a universal container of all bounded objects has no counterpart in $(\mathbb{U}, \in)$.
vi. The powerclass map $.ec$ deviates from the powerset operator $\mathbb{P}$ in two respects.
   - $.ec$ is not a subrelation of ϵ (a consequence of the existence of unbounded objects: $x\ \epsilon\ x.ec \leftrightarrow x \in \underline{O}.\ni$).
   - $.ec$ increases the *metalevel index*, the length of the shortest ϵ-path from the ground stage.

   The second property can be expressed as $x.mli + 1 = x.ec.mli$ and is a consequence of the missing empty set. In contrast, the length of the shortest $\in$-path from the ground stage of $(\mathbb{U}, \in)$ to $\mathbb{P}(x)$ equals constantly 1 for every set x (since $\varnothing \in \mathbb{P}(x)$ by definition of $\mathbb{P}$ and $\varnothing$ is an element (the only element) of the ground stage).
vii. The singleton map $.\varepsilon c$ is strictly partial, having the same domain as ϵ. As a further consequence of the missing empty set, $.\varepsilon c$ is partially coincident with $.ec$ (see the diagrams above for the common part of $.ec$ and $.\varepsilon c$ in the third stage):

$$x.\varepsilon c = x.ec \quad \leftrightarrow \quad x \text{ is terminal or a singleton.}$$

(In $(\mathbb{U}, \in)$, $\mathbb{P}(x) = \{x\} \leftrightarrow x = \varnothing$.)

The observations can be summarized into the following characterization.

1. Smallness. Although used for modelling of largeness, basic structures are themselves small by having a set (the set $\underline{O}$ of objects) as the universe of discourse. Similarly to *club sets* [15b], largeness of objects is expressed via their *unboundedness* relative to a limit ordinal.
2. Presence of unbounded objects. There are objects that are not in the domain of ϵ.
3. Presence of urelements (atoms, terminals). There are possibly *multiple* objects that are not in the range of

ϵ.

4. Absence of an "empty set" object. There is no distinguished object outside the range of ϵ that would correspond to the empty set.

Completion

A major part of this document consists of showing that every basic structure (as specified by the axioms) is a substructure of some complete basic structure. That is, every basic structure can be faithfully embedded into a complete structure. Or, concisely, *every basic structure has a completion*.

The completion is established gradually in the following steps:

1. Rank pre-completion. Attach a set X of ϖ new members to each object x that is (a) not well-founded in ϵ, (b) not ϵ-ranked (i.e. the rank $x.d$ differs from $r_\epsilon(x)$, the ϵ-rank of x), and (c) not a powerclass (i.e. x is *primary*). The members are attached in such a way that $(X, \epsilon, \leq)$ is isomorphic to $(\varpi, \in, \subseteq)$.
2. Powerclass completion. Append an infinite powerclass chain to each object for which the powerclass is not defined.
3. Singleton completion. Append an infinite singleton chain to each bounded object for which the singleton is not defined. Technically, this is performed in two steps by first adding just the missing primary singletons and subsequently performing the powerclass completion.
4. Extensional pre-completion. To every object x that does not satisfy certain consistency conditions attach two powerclass chains each of which starts in a terminal object. The resulting structure is *pre-complete*, that is,
   - extensionally consistent ($x \leq y \leftrightarrow x = y$ or $\emptyset \neq x.\ni \subseteq y.\ni$ for every objects x, y),
   - powerclass consistent (if x is *powerclass-like* then x is a powerclass),
   - powerclass complete, (every object x has a powerclass $x.ec$),
   - singleton complete (every bounded object x has a singleton $x.\varepsilon c$), and
   - ϵ-ranked (for every object x, $x.d = r_\epsilon(x)$).

   In particular, the structure is fully determined by bounded membership ϵ using the prescriptions already introduced for complete structures (see Basic structures from superstructures).
5. Cumulative embedding into an $(\varpi+1)$-superstructure. Let $\mathcal{S} = (\underline{O}, \epsilon)$ be the pre-complete structure to be embedded. Choose an $(\varpi+1)$-superstructure $\mathcal{V} = (\underline{V}, \epsilon)$ so that its ground stage $\underline{V}_1$ has the same cardinality as the set $\underline{T}$ of terminal objects of $\mathcal{S}$. Then the requested embedding map $.v$ is obtained as a limit of a transfinite sequence $.v_0, .v_1, \ldots, .v_\varpi = .v$ of maps from $\underline{O}$ to $\underline{V}$ defined as follows:

   I. The restriction of $.v_i$ to terminals is for every i identical and forms a bijection between $\underline{T}$ and $\underline{V}_1$.

   II. The restriction of $.v_i$ to the set $\underline{O}.\epsilon$ of non-terminal objects x is recursively defined by

   $x.v_0.\ni \;=\; x.\overline{\ni}.v_0.ec.\ni \cup x.\ni.v_0$ (where $\overline{\epsilon}$ equals $(\epsilon) \cap (\overline{\epsilon})$),

   $x.v_i.\ni \;=\; x.\overline{\ni}.v_{i-1}.ec.\ni \cup x.\ni.v_0$ if i is a successor ordinal,

   $x.v_i.\ni \;=\; \bigcup\{\, x.v_k.\ni \mid k < i \,\}$ if i is a limit ordinal.

   Note that the definition of $.v_0$ is by the well-founded recursion on $(\underline{O}, \epsilon)$, whereas the definition of $.v_i$ for $i > 0$ uses transfinite recursion over i.

Embedding into the von Neumann universe

The final embedding of $(\varpi+1)$-superstructures (and thus of basic structures) into the von Neumann universe of well-founded sets is established via *powerset cumulation*. For every ordinal number α let $\mathbb{P}_\star^\alpha$ be a map between sets defined using transfinite recursion by

$\mathbb{P}_\star^\alpha(x) = x \cup \bigcup\{(\mathbb{P}(\mathbb{P}_\star^\beta(x)) \setminus \{\emptyset\}) \mid \beta < \alpha\}$ (the *α-th cumulation of x*).

Equivalently, $\mathbb{P}_\star^0(x) = x$, $\mathbb{P}_\star^1(x) = x \cup (\mathbb{P}(x) \setminus \{\emptyset\})$, $\mathbb{P}_\star^{\alpha+1}(x) = \mathbb{P}_\star^1(\mathbb{P}_\star^\alpha(x))$, $\mathbb{P}_\star^\alpha(x) = \bigcup\{\mathbb{P}_\star^\beta(x) \mid \beta < \alpha\}$ with the last equality being satisfied for every limit α. Consequently, partial von Neumann universes are cumulations of $\{\emptyset\}$, i.e. for every ordinal α,

$\mathbb{V}_{1+\alpha} = \mathbb{P}_\star^\alpha(\{\emptyset\})$ (the set of of well-founded pure sets of rank less than $1+\alpha$).

(Note that the "$1+$-shift" only makes a difference for finite ordinals α.) Given an $(\varpi+1)$-superstructure $(\underline{O},\epsilon)$ to

be embedded into $(\mathbb{U},\in)$ as $\mathcal{V} = (\underline{V},\in)$ it is sufficient to choose the ground stage $\underline{V}_1$ of $\mathcal{V}$ to be a set such that (a) all elements of $\underline{V}_1$ are singletons, (b) the cardinality of $\underline{V}_1$ equals the cardinality of $\underline{O} \setminus \underline{O}.\epsilon$, and (c) $\underline{V}_1$ is a subset of $\mathbb{V}_{i+1} \setminus \mathbb{V}_i$ for some suitably large ordinal i (so that each element of $\underline{V}_1$ has equal rank, namely i). The $\underline{V}$ set is then obtained by

$$\underline{V} = \mathbb{P}_\star^{\varpi+1}(\underline{V}_1).$$

The inheritance root of $\mathcal{V}$ equals $\mathbb{P}_\star^{\varpi}(\underline{V}_1)$ and is simultaneously the set of bounded objects of $\mathcal{V}$.

Correspondence between constituents of a basic structure and their set-theoretic counterparts is provided by the Set representation theorem.

Sample structure

The following diagram shows a sample basic structure of object membership. The structure is built from 4 relations between objects:

- $\leq$, the *inheritance* relation, is a partial order which is shown in its reflexive transitive reduction by green arrows.
- ϵ, the *(object) membership* relation, is shown via both blue arrows and green arrows. Specifically, ϵ equals the composition $(\rightarrow) \circledcirc (\leq)$ where $\rightarrow$ is the (exact) relation indicated by blue arrows.
- $.ec$, the (partial) *powerclass map*, is a subrelation of ϵ indicated by horizontal blue arrows. (That is, $x.ec = y$ iff there is a horizontal blue arrow from x to y.)
- $.\varepsilon\!\!\!\varepsilon$, the (partial) *primary singleton map*, is another subrelation of ϵ – the range-restriction of ϵ to primary singletons, indicated by orange circles ( ) (That is, $x.\varepsilon\!\!\!\varepsilon = y$ iff there is a blue arrow from x to y and the y object is displayed as an orange circle. There are just two such objects in the sample structure.)

The $(\rightarrow)$ relation represented by blue arrows is also "reduced". It is the minimum relation R such that $R \circledcirc (\leq) = (\epsilon)$ and $(.ec) \subseteq R$. (The minimum relation S satisfying just $S \circledcirc (\leq) = (\epsilon)$ has two pairs less than $(\rightarrow)$: the horizontal arrows starting at c and $e.ec$.) Note that since $R \circledcirc (\leq) = (\epsilon)$ for some relation R, it follows, due transitivity and reflexivity of $\leq$, that $(\epsilon) \circledcirc (\leq) = (\epsilon)$ (the subsumption rule).

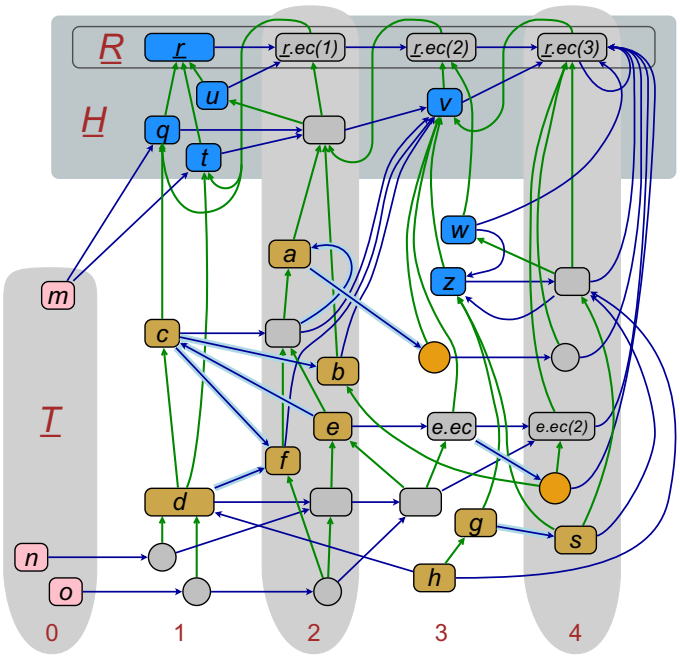

… class (bounded / unbounded)
… terminal object
… powerclass
… singleton (primary / powerclass)
… $(\epsilon) \setminus (\bar{\epsilon})$

$x \leq y$ iff $x \rightarrow \ldots \rightarrow y$
$x \epsilon y$ iff $x \rightarrow \rightarrow \ldots \rightarrow y$
If $x \rightarrow y$ then:
$x.ec = y$ iff $\rightarrow$ is horizontal
$x.\varepsilon\!\!\!\varepsilon = y$ iff y is a primary singleton
$x.\varepsilon c = y$ iff y is a singleton
$x.\downarrow = \{a \mid a \leq x\}$ … descendants of x
$x.\ni = \{a \mid a \epsilon x\}$ … members of x
$x \bar{\epsilon} y$ iff $x.\downarrow \subseteq y.\ni$
$x \epsilon y$ iff $x \epsilon y$ and x is bounded

$\underline{O}$ … objects $= \underline{T} \uplus \underline{C} \uplus \underline{O}.ec \uplus \underline{O}.\varepsilon\!\!\!\varepsilon$
$\underline{O}.ec$ … powerclasses
$\underline{O}.pr$ … primary objects $= \underline{T} \uplus \underline{C} \uplus \underline{O}.\varepsilon\!\!\!\varepsilon$
$\underline{T}$ … terminal objects $= \underline{O} \setminus \underline{r}.\downarrow$
$\underline{C}$ … classes $= \underline{O}.pr \setminus (\underline{T} \cup \underline{O}.\varepsilon\!\!\!\varepsilon)$

$\underline{O}.\ni$ … bounded objects
$\underline{O}.\varepsilon\!\!\!\varepsilon$ … primary singletons
$\underline{O}.\varepsilon c$ … singletons $= (\underline{T}.ec \cup \underline{O}.\varepsilon\!\!\!\varepsilon).ec^*$
$\underline{H}$ … helix objects $= \underline{r}.\epsilon^*$
$\underline{R}$ … reduced helix $= \underline{r}.ec^*$
$\underline{r}$ … inheritance root

Objects form a set denoted $\underline{O}$. Objects are either *powerclasses* or *primary* according to whether they appear in the image of $.ec$ or not, respectively. Components of $.ec$ are *powerclass chains*. Each powerclass chain starts in a primary object. (A chain may consist of just its primary object.) Correspondingly, each object x has its primary object $x.pr$.

An object x is either *unbounded* or *bounded* according to whether x appears in a cycle of $\in$ or not, respectively. (Note: This characterization of boundedness is applicable due to the finiteness of the structure, see Speciality of the sample.) That is, unbounded objects x are those such that $x \in^i x$ for some natural $i > 0$, where $\in^i$ is the i-th composition of $\in$ with itself. Boundedness is preserved along powerclass chains: An object x is (un)bounded iff the primary object $x.pr$ is (un)bounded. In the sample structure, the primary unbounded objects are displayed in blue. There is a distinguished unbounded object, denoted $\underline{r}$ and called the *inheritance root*. It is the highest unbounded object in inheritance. In fact, $\underline{r}$ is the top of $\underline{O}.\in$, that is, the common ancestor of all objects that have any members. Simultaneously, $\underline{r}$ is a common container of all objects, $\underline{r}.\ni = \underline{O}$, including itself, $\underline{r} \in \underline{r}$. In addition, there are two distinguished sets of unbounded objects.

- $\underline{H}$, the set of *helix* objects, is the set of all direct or indirect containers of $\underline{r}$, i.e. $x \in \underline{H}$ iff $\underline{r} \in^i x$ for some i.
- $\underline{R}$, the *reduced helix*, is the powerclass chain whose primary object is $\underline{r}$. Note that $\underline{R}$ is linearly ordered by inheritance, inversely to $.ec$.

Observe the following inclusion chain: $\{\underline{r}\} \subseteq \underline{R} \subseteq \underline{H} \subseteq \underline{O}.\in$. Moreover, all 4 sets have the same descendants – that is, $\underline{r}.↧ = \ldots = \underline{O}.\in.↧$. Objects that are not descendants of $\underline{r}$ are *terminal(s)*. All terminal objects are primary. Objects that are neither terminal nor powerclasses nor primary singletons are *classes*. The sets of terminals and classes are denoted $\underline{T}$ and $\underline{C}$, respectively, so that we can express a fundamental partition of objects into 4 sets:

- $\underline{O} = \underline{T} \uplus \underline{C} \uplus \underline{O}.ec \uplus \underline{O}.εϐ$.

Power membership

$\overline{\in}$

$\in$, $\leq$, $\underline{r}$, $.ec$, $.εϐ$

$\in^{-1}$

$\in^{-2}$

$\in^{-3}$

$\vdots$

The four definitory relations $\leq$, $\in$, $.ec$ and $.εϐ$ of the sample structure are among constituents of the signature of basic structures according to the diagram on the left. In particular, the inheritance relation, $\leq$, appears as the 0-th member of the infinite sequence

$$\overline{\in}^{(*)} = \{\overline{\in}^i \mid i \in \mathbb{Z}, i \leq 1\},$$

of relations between objects, where $(\overline{\in}) = (\overline{\in}^1)$ is the *power membership* relation, and $(\leq) = (\overline{\in}^0)$. As a definitional extension, we let $(\in^i) = (\overline{\in}^i)$ for every $i \leq 0$. Moreover, for $i > 0$, we let $\in^i$ (resp. $\overline{\in}^i$) be equal to the i-th relational composition of $\in$ (resp. of $\overline{\in}$) with itself.

In the particular case of the sample structure, we assume that $\overline{\in}$ and $\in^{-i}$, $i \in \mathbb{N}$, are derived from $\leq$, $\in$, $.ec$ and $.εϐ$ as follows:

- $\overline{\in}$ is defined by: $x \overline{\in} y \leftrightarrow x.↧ \subseteq y.\ni$ (x is a *power member* of y if all descendants of x are members of y),
- $(\in^{-1}) = (\leq) \circledcirc ((.ce) \cup (.ϐε)) \circledcirc (\leq)$, ($.ce$ / $.ϐε$ denote the inverse of $.ec$ / $.εϐ$.), and
- for every natural $i > 1$, $\in^{-i}$ equals the i-th relational composition of $\in^{-1}$ with itself.

In the sample structure, the difference $(\in) \setminus (\overline{\in})$ contains exactly 8 membership pairs, indicated by blue arrows with a highlighted background. (For instance, $(d,f) \notin (\overline{\in})$ since $n.ec \in d.↧ \setminus f.\ni$.)

The $\in$-diamond

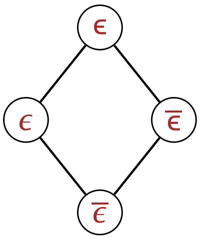

The diagram on the right shows significant subrelations of $\in$ (note that $.ec$ and $.εϐ$ are another significant subrelations of $\in$):

- $\overline{\in}$, the *power membership*, has been introduced above.
- ϵ, the *bounded membership*, is the domain-restriction of $\in$ to bounded objects, that is,

  $x \epsilon y \quad \leftrightarrow \quad x \in y$ and x is bounded.
- Additionally, $\overline{\epsilon}$ denotes the *bounded power membership*, that is, $(\overline{\epsilon}) = (\epsilon) \cap (\overline{\in})$.

The point of the diagram is that the relations form a lattice w.r.t. inclusion, that is, in addition to the (not much significant) definition of $\overline{\epsilon}$ we also have

$$(\in) = (\epsilon) \cup (\overline{\in}),$$

which is asserted by the following axioms of basic structures:

(b~1) $(\overline{\epsilon}) \subseteq (\epsilon)$,

(b~11) $x.\epsilon = x.\overline{\epsilon}$ for every unbounded object x.

Specialities of the sample

Although the sample structure appears to be fairly wild, it does not expose all features allowed by the general definition. In particular, the sample possesses the following special properties.

- As described above, $\overline{\epsilon}$ and ϵ^{-i}, $i \in \mathbb{N}$, are derived from $\leq$, ϵ, $.ec$ and $.\varepsilon\mathfrak{c}$.
- There are only finitely many objects. In particular, the set $\underline{C}$ of classes is finite. This allowed us to define unboundedness of objects via their circularity in ϵ.
- $\underline{H} = \underline{R}.\uparrow$ – that is, helix objects are ancestors of $\underline{R}$. This simplifies the description of metalevels below.

Powerclasses and singletons

In addition to the powerclass map, $.ec$, there is a second definitory constituent of the structure that is a partial map between objects: the *primary singleton* map, $.\varepsilon\mathfrak{c}$. This map in turn appears to be just a difference $(.\varepsilon c) \setminus (.ec)$ where

- $x.\varepsilon c = y \quad \leftrightarrow \quad$ (i) $x.\varepsilon\mathfrak{c} = y$ or (ii) $x.ec = y$ and $\underline{x.pr} \in \underline{T} \cup \underline{O}.\varepsilon\mathfrak{c}$.

The derived partial map $.\varepsilon c$ is the *singleton* map. Objects from the image $\underline{O}.\varepsilon c$ are *singletons*. The following table shows the main properties of $.ec$ and $.\varepsilon c$ in comparison.

	y is the **powerclass** of x, $x.ec = y$		y is the **singleton** of x, $x.\varepsilon c = y$ y is the **primary singleton** of x, $x.\varepsilon\mathfrak{c} = y$		
(a)	x is the highest member of y	$x.\downarrow = y.\ni$	$\{x\} = y.\ni$	x is the only member of y	(a')
(b)	y is the lowest power container of x	$x.\overline{\epsilon} = y.\uparrow$	$x.\epsilon = y.\uparrow$	y is the lowest container of x	(b')

Note that although conditions (a) and (b) (resp. (a') and (b')) define a one-to-one relation between objects, the $.ec$ (resp. $.\varepsilon\mathfrak{c}$) map is given explicitly. For example, in the sample structure,

- the $(q.ec, v)$ pair satisfies both (a) and (b) but v is not a powerclass,
- the (g, s) pair satisfies both (a') and (b') but s is not a singleton.

Metalevels

In the diagram of the sample structure, objects are grouped into columns in a correspondence to *metalevels*. The *metalevel index* of an object x is denoted $x.mli$ and equals the number of ancestors of x that belong to $\underline{R}$, the reduced helix. By (b~10), $x.mli$ is asserted to be finite even if $\underline{R}$ is infinite. The set $\underline{T}$ of terminal objects is the 0-th metalevel. For $i > 0$, the top of the i-th metalevel is the i-th element from $\underline{R}$, starting with $\underline{r}$ as the 1-st object.

Axioms of basic structures assert that when going alongside $\leq$, ϵ, $.ec$ or $.\varepsilon\mathfrak{c}$ there are the following limitations about the possible increment of the metalevel index:

If $x \leq y$ then $y.mli - x.mli \leq 0$,
if $x \epsilon y$ then $y.mli - x.mli \leq 1$,
if $x.ec = y$ then $y.mli - x.mli = 1$,
if $x.\varepsilon\mathfrak{c} = y$ then $y.mli - x.mli = 1$.

Rank

In addition to the metalevel index, each object x has defined a *rank*, denoted $x.d$. For the purpose of the introductory sample, we provide a simplified definition of $.d$. Let $\mathcal{E} = \{\mathcal{E}^i \mid i \in \mathbb{Z}\}$ be a system of relations between objects generated by the following rules.

a. $(\epsilon) \subseteq (\mathcal{E}^1)$.
b. $(\leq) \subseteq (\mathcal{E}^0)$.
c. $(.ce) \cup (.\mathfrak{c}\varepsilon) \subseteq (\mathcal{E}^{-1})$. ($.ce$ / $.\mathfrak{c}\varepsilon$ denote the inverse of $.ec$ / $.\varepsilon\mathfrak{c}$.)
d. $(\mathcal{E}^j) \circledcirc (\mathcal{E}^k) \subseteq (\mathcal{E}^{j+k})$ for every integers j, k.

Equivalently,

- $x\ \mathcal{E}^i\ y$ iff $x = x_0\ \epsilon^{i_1}\ x_1\ \epsilon^{i_2} \cdots \epsilon^{i_n}\ x_n = y$

for some natural $n > 0$, objects $x_0, x_1, \ldots, x_n$ and signs $i_1, \ldots, i_n \in \{-1,0,1\}$ such that $i_1 + \cdots + i_n = i$ and where

$(\epsilon^1) = (\epsilon)$, $(\epsilon^0) = (\leq)$, and $(\epsilon^{-1}) = (\leq) \circledcirc ((.ce) \cup (.\not{c}\varepsilon)) \circledcirc (\leq)$. (See power membership.)

We might call the above sequence $x_0, x_1, \ldots, x_n$ of objects an $\mathcal{E}^i$-*path*. If $x\ \mathcal{E}^i\ y$ for an integer i, then x is an *i-path member* of y. Due to the limitations for the possible increment of metalevel index we obtain the following implication for every integer i:

- if $u\ \mathcal{E}^i\ x$ then $u.mli + i \geq x.mli$.

Now the rank of an object x is defined by

- $x.d = sup\ \{u.mli + i \mid u\ \mathcal{E}^i\ x,\ i \in \mathbb{Z}\}$.

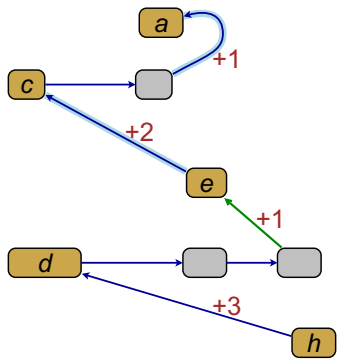

Informally, the rank maximalizes the metalevel increment along (inverted) $\mathcal{E}^i$-paths. The diagram on the right shows such a maximalizing path for the a object from the sample structure. The values (in brown) show the contribution of each arrow (ϵ or $\leq$) to the rank. The overall increment is 7 so that $a.d = a.mli + 7 = 9$.

Note: In general, it is possible to have maximalizing paths with some horizontal (i.e. $.ec$) arrows oriented in opposite direction.

Observe that since $x\ \mathcal{E}^0\ x$, the rank is at least so big as the metalevel index. Since $(\epsilon^i) \subseteq (\mathcal{E}^i)$ for every $i > 0$, the rank of every unbounded object x (such that $x\ \epsilon^i\ x$ for some $i > 0$) is infinite, that is, $x.d = \omega$. This is in contrast to the metalevel index which is always finite. Moreover, we have the following classification of objects according to their rank:

- Unbounded objects are those with infinite rank.
- Bounded objects are those with finite rank.
- Terminal objects are those with zero rank.

Similarly to the metalevel index, the powerclas map increases the rank of bounded objects exactly by 1.

Preliminaries

Some familiarity with elementary algebra, order theory and set theory is assumed. This involves such notions as *structure*, *substructure*, *sort*, *generating set/structure*, *(partial) function*, *relation*, *domain*, *range*, *restriction*, *extension*, *injectivity*, *reflexivity*, *transitivity*, *antisymmetry*, *monotonicity*, *isomorphism*, or *closure operator*.

Relations are regarded as sets (or in some cases as set-theoretic classes) of ordered pairs (x,y). The domain (resp. range) of a relation R is the set of all x (resp. y) such that (x,y) is from R for some y (resp. x). Functions (maps) are regarded as functional (left-unique) relations. We speak about a total (resp. partial) function on a set X if the function's domain equals X (resp. is a subset of X).

Main notational conventions

Most set-theoretic symbols have been described in the introduction. We also use the $\uplus$ symbol for disjoint union of sets, i.e. $x \uplus y = z$ iff $x \cup y = z$ and $x \cap y = \emptyset$. We use set-builder notation with a vertical bar so that e.g. $\{x \mid x \leq y\}$ is the set of all x such that $x \leq y$.

The $\circledcirc$ symbol is used for relational composition. Inscribed triangle indicates the left-to-right direction, so that $R \circledcirc S$ is the set of all pairs (x,z) such that there is a y such that $(x,y) \in R$ and $(y,z) \in S$.

We mostly use "dot" notation for function application. The expression $x.f$ refers to the application of f to x (the value of f at x) whenever f is a map and it is asserted that x is from the domain of f. In contrast, the expression $X.f$ (with an uppercase X on the left side instead of the lowercase x) refers to the image of the set X under f, i.e.

$X.f = \{\, y \mid$ there exists $x \in X$ such that $(x,y) \in f \,\}$.

We let the dot symbol "." be the initial character of map names whenever the dot notation is used for the map application. According this rule, the f function above would be referred to by $.f$. If $.f$ and $.g$ are functions then $.f.g$ refers to the composition $(.f) \circledcirc (.g)$. Furthermore, we let the dot notation be applicable for images of relations. If ϵ is a relation then $X.\epsilon$ is the image of X under ϵ and $x.\epsilon$ is a shorthand of $\{x\}.\epsilon$. If in addition, $.f$ is a function

then $x.\epsilon.f$ refers to the image of x under $(\epsilon) \circledcirc (.f)$.

Symbols $\rightarrow$ / $\curvearrowright$ / $\hookrightarrow$ indicate total / partial / injective maps, respectively.

Ordinal numbers

Let On denote the proper class of ordinal numbers (shortly *ordinals*). According to the standard definition, α belongs to On iff α is a transitive set strictly well-ordered by $\in$. Following standard conventions we will use special symbols for set operations on ordinals. In particular, for ordinals α, β and a set X of ordinals,

- $\alpha + 1 = \alpha \cup \{\alpha\}$ (the successor of α),
- $\alpha \leq \beta$ iff $\alpha \subseteq \beta$,
- $\alpha < \beta$ iff $\alpha \in \beta$ iff $\alpha \leq \beta$ and $\alpha \neq \beta$,
- $\alpha \wedge \beta = \alpha \cap \beta$ (the minimum between α and β), similarly, $\alpha \vee \beta = \alpha \cup \beta$,
- $sup(X) = \bigvee X = \bigcup X$. (The supremum of X. We will mostly prefer the $sup(X)$ expression.)

If β is a successor ordinal then $\beta\text{-}1$ refers to the unique ordinal of which β is a successor. We will also sometimes use the $\leq$ symbol (and its variants $<$, $\geq$ and $>$) for relations between *sets* of ordinal numbers (cf. Polars of $\leq$). If X, Y and $\{\alpha\}$ are sets of ordinals then

$X \leq Y$ iff $\alpha \leq \beta$ for every $\alpha \in X$ and $\beta \in Y$,

$\alpha \leq X$ iff $\{\alpha\} \leq X$.

Note that this introduces ambiguity of the meaning of $X \leq Y$ since X or Y may themselves be ordinals. A disambiguation should be clear from the context.

Cardinal numbers

We assume axiom of choice and use the von Neumann cardinal assignment. The cardinality of a set X (notation: $\mathrm{card}(X)$) is the least ordinal α such that there is a bijection between X and α. Cardinal numbers (shortly *cardinals*) are ordinal numbers α such that $\mathrm{card}(\alpha) = \alpha$.

Natural numbers

We regard natural numbers as the finite ordinal numbers $0, 1, 2, \ldots$. We let the set of natural numbers be denoted by either $\mathbb{N}$ or by ω according to which symbol is considered appropriate in the given context.

Integers

We denote $\mathbb{Z}$ the set of integer numbers and let the set $\mathbb{N}$ of natural numbers be coincident with non-negative integers. The binary operation of addition is extended by

$i + \omega = \omega$ for every integer i.

Well-foundedness

For a relation ϵ on a set X, an element $x \in X$ is *well-founded in* ϵ if x is not a member of an infinite descending chain in ϵ, i.e. if there is no infinite chain of the form

$\ldots x_2 \epsilon x_1 \epsilon x_0 = x$.

A relation ϵ on a set X is *well-founded* if all elements $x \in X$ are well-founded in ϵ. Assuming the axiom of choice, this is equivalent to the condition that every non-empty subset $Y \subseteq X$ contains an element y that is minimal in (Y,ϵ), i.e. there is no u from Y such that $u \epsilon y$.

Rank

For a well-founded relation ϵ on a set X, the *rank* function of ϵ (alternatively, the ϵ-rank) is a map $r()$ from X to ordinal numbers such that for every $x \in X$,

- $r(x) = sup\ \{r(a) + 1 \mid a\ \epsilon\ x\}$.

By well-founded recursion, there is exactly one such map. Obviously, $r(x) = 0 \leftrightarrow x$ is minimal in ϵ. Moreover,

- let the ϵ-rank of a subset Y of X be $sup\ \{r(a) + 1 \mid a \in Y\}$,
- let the rank of ϵ be the ϵ-rank of X.

Limited rank

Assume that ϵ is a (not necessarily well-founded) relation on a set X and let ϖ be a limit ordinal. Define recursively a function $r_\epsilon : X \to \varpi{+}1$ by

$r_\epsilon(x) = \varpi \wedge sup\ \{r_\epsilon(a) + 1 \mid a \epsilon x\}$ if x is well-founded in ϵ,

$r_\epsilon(x) = \varpi$ otherwise.

For $x \in X$, we call $r_\epsilon(x)$ the *ϖ-limited rank* of x (w.r.t. ϵ).

Fixing a limit ordinal $\underline{\varpi}$

If not stated otherwise we will further assume that a fixed limit ordinal $\underline{\varpi}$ is given in the context. This ordinal number will be the highest rank of objects under consideration. The choice of the symbol indicates that the first limit ordinal ω is considered to be "sufficient" with respect to object technology.

Ordinal numbers less than $\underline{\varpi}$ are *bounded*, the remaining (including $\underline{\varpi}$ itself) are *unbounded*. More generally, a set X of ordinal numbers is bounded or unbounded according to whether $sup(X)$ is bounded or unbounded, respectively.

Basic structure

This section provides a formal definition of *basic structures*. Before stating the axioms we first introduce the family of *$\epsilon 5$-structures* which defines the language of basic structures.

Note: The family of basic structures can be viewed as a generalization of metaobject structures introduced later. The generalization consists of

- allowing $.ec$ and $.\varepsilon c$ to be incomplete,
- abstraction from ϵ, $\overline{\epsilon}$ and ϵ^{-i} for every natural i.

Moreover, because of the incompleteness, the singleton map $.\varepsilon c$ is not taken as the definitory constituent. Instead, the *primary singleton* map, $.\varepsilon\!\!\!\!\!\!\,\,c$, is introduced, which stands for the difference $(.\varepsilon c) \setminus (.ec)$. As a consequence, the existence of $x.ec$ and that of $x.\varepsilon\!\!\!\!\!\!\,\,c$ for a given object x are independent of each other.

$\epsilon 5$-structure

By an *$\epsilon 5$-structure* we mean a structure $\mathcal{S} = (\underline{O}, \epsilon^{(*)}, \overline{\epsilon}^{(*)}, \underline{r}, .ec, .\varepsilon\!\!\!\!\!\!\,\,c)$ where

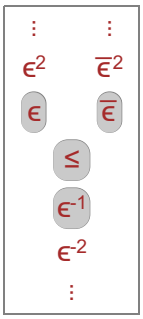

- $\underline{O}$ is a set of *objects*,
- $\epsilon^{(*)}$ and $\overline{\epsilon}^{(*)}$ are bi-infinite sequences of relations between objects such that $(\epsilon^i) = (\overline{\epsilon}^i)$ for $i \leq 0$ and where
  - $(\epsilon) = (\epsilon^1)$ is the *(object) membership* relation,
  - $(\overline{\epsilon}) = (\overline{\epsilon}^1)$ is the *power membership* relation,
  - $(\leq) = (\epsilon^0)$ is the *inheritance* relation (with $.\downarrow$ / $.\uparrow$ used for preimages / images under $\leq$),
  - (ϵ^{-1}) is the *anti-membership* relation,
- $\underline{r}$ is the *inheritance root*, a distinguished object.

The remaining two definitory constituents are partial maps $\underline{O} \curvearrowright \underline{O}$ (i.e. functional relations between objects):

- $.ec$ is the *powerclass* map (objects from $\underline{O}.ec$ are *powerclasses*),
- $.\varepsilon\!\!\!\!\!\!\,\,c$ is the *primary singleton* map (objects from $\underline{O}.\varepsilon\!\!\!\!\!\!\,\,c$ are *primary singletons*).

The only additional constraint which are $\epsilon 5$-structures subject to is the following condition:

(b~0) For every positive natural i, (a) $(\epsilon) \circledcirc (\epsilon^i) = (\epsilon^{1+i})$, (b) $(\overline{\epsilon}) \circledcirc (\overline{\epsilon}^i) = (\overline{\epsilon}^{1+i})$.

That is, for every positive natural i, ϵ^i (resp. $\overline{\epsilon}^i$) is the i-th relational composition of ϵ (resp. of $\overline{\epsilon}$) with itself. Consequently, we consider the bi-infinite sequence $\overline{\epsilon}^{(*)}$ to be a definitional extension of the left-infinite sequence $\{\overline{\epsilon}^i \mid i \in \mathbb{Z}, i \leq 1\}$ and the bi-infinite sequence $\epsilon^{(*)}$ to be obtainable by a definitional extension of $(\epsilon, \overline{\epsilon}^{(*)})$, so that we usually drop the "wildcard" superscript from $\epsilon^{(*)}$ in the signature.

The following definitions are (almost) sufficient to state the axioms of basic structures.

- For every integer i, $\ni^i$ (resp. $\overline{\ni}^i$) denotes the inverse of ϵ^i (resp. of $\overline{\epsilon}^i$).
- For a natural i, let $.ec(i)$ be the i-th composition of $.ec$ with itself, with $.ec(0)$ being the identity on $\underline{O}$. Let $.ec(-i)$ be the inverse of $.ec(i)$.
- Let $\underline{T} = \underline{O} \setminus \underline{O}.\epsilon.\mathrm{I}$ be the set of *terminal* objects (or *terminals*).
- The *metalevel index*, $x.mli$, and *rank*, $x.d$, of an object x are defined by
  - $x.mli = sup\ \{ i \mid x\ \epsilon^{1-i}\ \underline{r},\ i \in \mathbb{N} \}$,
  - $x.d = sup\ \{a.mli + i-j \mid a \in x.\ni^i.\ni^{-j},\ i,j \in \mathbb{N}\}$,

  where the definition of $.d$ only applies to the special case $\underline{\varpi} = \omega$ and under additional assumptions which are consequences of (b~1)–(b~10). The general definition of $.d$ is provided in the next section.

Basic structure

By a *basic structure* (of ϵ) we mean an $\epsilon 5$-structure $\mathcal{S} = (\underline{O}, \epsilon, \overline{\epsilon}^{(*)}, \underline{r}, .ec, .\varepsilon\!\!\!\varsigma)$ satisfying the following axioms:

(b~1) $(\overline{\epsilon}) \subseteq (\epsilon)$.

(b~2) $(\overline{\epsilon}^i) \circledcirc (\overline{\epsilon}^j) \subseteq (\overline{\epsilon}^{i+j})$ for every integer i, j.

(b~3) $(\epsilon) \circledcirc (\epsilon^i) \subseteq (\epsilon^{1+i})$ for every integer i.

(b~4) $(\overline{\epsilon}^i) \cap (\overline{\ni}^{-i}) = .ec(i)$ for every integer i.

(b~5) The inheritance root $\underline{r}$ is the top of $\underline{O}.\epsilon$ w.r.t. $\leq$.

(b~6) Every object x has a container, $x.\epsilon \neq \emptyset$.

(b~7) For every object x from $\underline{T} \cup \underline{O}.\varepsilon\!\!\!\varsigma$ and every natural i, (a) $x.\ni^{-i} = \{x\}.ec(i)$, (b) $x.\ni^{-i}.\epsilon = x.\ni^{-i}.\overline{\epsilon}$.

(b~8) If $x.\varepsilon\!\!\!\varsigma = y$ then: (a) $\{x\} = y.\ni$, (b) $x.\epsilon^i = y.\epsilon^{i-1}$ for every $i \leq 1$, (c) $(x,y) \notin (\overline{\epsilon})$.

(b~9) Reserved for the non-member union map.

(b~10) For every object x, the metalevel index $x.mli$ is finite.

(b~11) For every object x, $x.d = \underline{\varpi} \rightarrow x.\epsilon = x.\overline{\epsilon}$. (That is, every unbounded object is a power member.)

First observations:

1. The (b~2) condition has three important special cases:
   - For $i = j = 0$ the transitivity of $\leq$: $(\leq) \circledcirc (\leq) \subseteq (\leq)$.
   - For $i = 0$ and $j = 1$ the monotonicity of $\overline{\epsilon}$: $(\leq) \circledcirc (\overline{\epsilon}) \subseteq (\overline{\epsilon})$.
   - For $i = 1$ and $j = 0$ the subsumption of $\overline{\epsilon}$: $(\overline{\epsilon}) \circledcirc (\leq) \subseteq (\overline{\epsilon})$.

   Using (b~0) (b~1) and (b~3) it follows that (b~2) is equivalent to:

   (b~2)' (a) $(\overline{\epsilon}) \circledcirc (\leq) \subseteq (\overline{\epsilon})$, (b) $(\overline{\epsilon}^{-i}) \circledcirc (\overline{\epsilon}^{1-j}) \subseteq (\overline{\epsilon}^{1-i-j})$ for every natural i, j.
2. Condition (b~3) has the subsumption of ϵ as an important case: $(\epsilon) \circledcirc (\leq) \subseteq (\epsilon)$. Moreover, it follows from (b~0) that (b~3) can be equivalently stated as any of (i) or (ii):
   i. $(\epsilon) \circledcirc (\epsilon^{-i}) \subseteq (\epsilon^{1-i})$ for every natural i.
   ii. $(\epsilon^i) \circledcirc (\epsilon^j) \subseteq (\epsilon^{i+j})$ for every natural $i > 0$ and every integer j.
3. For $i = 0$ in (b~4) we obtain the antisymmetry and reflexivity of $\leq$: $(\leq) \cap (\geq) = (\underline{O}, =)$. It follows that $\leq$ is a partial order on $\underline{O}$.

   The case $i = 1$ shows that $.ec$ is given by $\overline{\epsilon}^{(*)}$.
4. By (b~5) the inheritance root $\underline{r}$ is given by $(\underline{O}, \epsilon, \leq)$ as the unique object x such that $x.\mathrm{I} = \underline{O}.\epsilon.\mathrm{I}$. That is, $\underline{O} = \underline{T} \uplus \underline{r}.\mathrm{I}$.

   Moreover, since $\underline{r}\ \epsilon\ x \leq \underline{r}$ for some object x it follows by subsumption of ϵ that $\underline{r}\ \epsilon\ \underline{r}$. Since $\underline{r}$ is non-well-founded in ϵ it follows by (b~11) that $\underline{r}\ \overline{\epsilon}\ \underline{r}$. Consequently, for every non-terminal x, $x\ \overline{\epsilon}\ \underline{r}$ by monotonicity of $\overline{\epsilon}$ and $x\ \epsilon\ \underline{r}$ since $(\overline{\epsilon}) \subseteq (\epsilon)$.

5. Since it is already asserted by (b~1)–(b~5) and (b~11) that $x\,\overline{\epsilon}\,\underline{r}$ for every non-terminal x, the (b~6) condition can be stated just for terminal x, i.e. as $\underline{T} \subseteq \underline{O}.\ni$. Moreover, since (b~7)(b) (with $i = 0$) asserts $x.\epsilon = x.\overline{\epsilon}$ for every terminal x it follows that every object has a (power) container and $\underline{r}$ is a universal (power) container:

   $\underline{O}.\ni = \underline{O}.\overline{\ni} = \underline{O} = \underline{r}.\overline{\ni} = \underline{r}.\ni$.

   (However, $\underline{r}$ is not necessarily a unique object with this property.)
6. Axiom (b~7)(a) can be stated as any of (i)–(iv), using additional definitions. For every x from $\underline{T} \cup \underline{O}.\varepsilon\!\!\!/$,
   i. $x.\overline{\ni}^{-i} \subseteq x.\overline{\epsilon}^{i}$ for every natural i,
   ii. $x.\overline{\ni}^{-*} \subseteq x.\overline{\epsilon}^{*}$ (where $(\overline{\epsilon}^{*}) = \bigcup\{\epsilon^{i} \mid i \in \mathbb{N}\}$ and $(\overline{\epsilon}^{-*}) = \bigcup\{\epsilon^{-i} \mid i \in \mathbb{N}\}$),
   iii. $x.\overline{\ni}^{-*} = x.ec^{*}$ (where $.ec^{*}$ is the reflexive transitive closure of $.ec$),
   iv. $x.\overline{\ni}^{*-*} = x.ec^{*-*}$ (where $(\overline{\ni}^{*-*}) = (\overline{\ni}^{*}) \cup (\overline{\ni}^{-*})$ and $(.ec^{*-*}) = (.ec^{*}) \cup (.ce^{*})$).

   For (iii), use well-foundedness of x and apply $x.ec(i)\ \epsilon^{j}\ x \ \rightarrow\ i = j$, see observation B3. For (iv), use $x.\overline{\ni} = \emptyset$ which is asserted by (b~8).
7. Axiom (b~7)(b) can be stated as the equality $x.\epsilon = x.\overline{\epsilon}$ for every x from $(\underline{T} \cup \underline{O}.\varepsilon\!\!\!/).ec^{*}$ (which is exactly the set of terminals and singletons).
8. In (b~8) we obtain $x.\mathrm{I}\!\uparrow = y.\epsilon^{-1}$ for $i = 0$ in (b) and thus $x\,\ni^{-1}\,y$. It follows that $.ec$ and $.\varepsilon\!\!\!/$ are disjoint subrelations of $\ni^{-1}$:

   $(.ec) = (\ni^{-1}) \cap (\overline{\epsilon})$,

   $(.\varepsilon\!\!\!/) \subseteq ((\ni^{-1}) \setminus (\overline{\epsilon})) \cap (\epsilon)$ (where $(.\varepsilon\!\!\!/) \subseteq (\epsilon)$ is by (b~8)(a) or also by (b~8)(b) for $i = 1$).

   In in the (b) condition, "=" can be replaced by "⊆" (the inverse inclusion follows by (b~3)). Moreover, the (c) condition (i.e. $(x,y) \notin (\overline{\epsilon})$) can be stated as any of (i)–(iii):

   (i) $y.\overline{\ni} = \emptyset$, (ii) $(x,y) \notin (.ec)$, (iii) $y \notin \underline{O}.ec$,

   using (b~8)(a) for (i) and (b~4) for (ii) and (iii). In particular, (iii) means $\underline{O}.ec \cap \underline{O}.\varepsilon\!\!\!/ = \emptyset$ – powerclasses are disjoint with primary singletons.
9. Axioms (b~11) and (b~1) can be equivalently stated as the single equality

   $(\epsilon) = (\epsilon) \cup (\overline{\epsilon})$

   where ϵ is the domain-restriction of ϵ to bounded objects – objects x such that $x.d < \underline{\varpi}$.
10. A minimum basic structure is such that $\underline{O} = \{\underline{r}\}$. In such a case,
    - $.ec = .\varepsilon\!\!\!/ = \emptyset = (\overline{\epsilon}^{i})$ for $i < 0$ and $(\overline{\epsilon}^{i}) = (\epsilon) = \{(\underline{r}, \underline{r})\}$ for $i \geq 0$.

Observations about *.ec*

Observations A: Assume (b~1)–(b~4).

1. For every objects x, y, if $x.ec = y$ then

   (a) $x.\mathrm{I}\!\downarrow = y.\ni = y.\overline{\ni}$, (b) $x.\overline{\epsilon} = y.\mathrm{I}\!\uparrow$,

   (c) $x.\mathrm{I}\!\uparrow = y.\overline{\epsilon}^{-1}$, (d) $x.\ni^{-1} = y.\mathrm{I}\!\downarrow$.

   It follows from $x.\mathrm{I}\!\downarrow = y.\ni$ that $.ec$ is injective.
2. If $x.ec(i) = y$ for an integer i then (a)–(d) from the previous statement hold with $\epsilon^{-1}/\overline{\epsilon}/\epsilon$ replaced by $\epsilon^{-i}/\overline{\epsilon}^{i}/\epsilon^{i}$.
3. Corollary: In a powerclass complete (pre-)basic structure, powers of $\overline{\epsilon}$ are given by $\leq$ and $.ec$:

   $(\overline{\epsilon}^{i}) \;=\; (\leq) \circledcirc .ec(i) \circledcirc (\leq)$ for every integer i.
4. For every objects x, y and every integers i, j, k, if both $x.ec(i)$ and $y.ec(j)$ are defined then
   i. $x.ec(i)\ \overline{\epsilon}^{k}\ y.ec(j) \ \leftrightarrow\ x\,\overline{\epsilon}^{k+i-j}\,y$,
   ii. $x.ec(i)\ \epsilon^{k}\ y.ec(j) \ \rightarrow\ x\,\epsilon^{k+i-j}\,y$,
   iii. $x\,\epsilon^{k}\,y.ec(j) \ \leftrightarrow\ x\,\epsilon^{k-j}\,y$.
5. Corollary (the case $i = j = 1$, $k = 0$ in (i)): The $.ec$ map is an order embedding of $(\underline{O}.ce, \leq)$ into $(\underline{O}, \leq)$:

   $x \leq y \ \leftrightarrow\ x.ec \leq y.ec$ whenever both $x.ec$ and $y.ec$ are defined.
6. If $x.ec = y$ then: x is well-founded in ϵ $\leftrightarrow$ y is well-founded in ϵ.
7. If y is well-founded in ϵ then $y.ec(-i)$ is only defined for finitely many natural i so that $\underline{y.pr}$ exists.

Proof:

2. (Apply: (a) $x.\mathrm{I}\!\downarrow = y.\ni^{i} \leftrightarrow y.\ni^{i} \subseteq x.\mathrm{I}\!\downarrow \subseteq y.\ni^{i}$, (b) $x.\overline{\epsilon}^{i} = y.\mathrm{I}\!\uparrow \leftrightarrow y.\mathrm{I}\!\uparrow \subseteq x.\overline{\epsilon}^{i} \subseteq y.\mathrm{I}\!\uparrow$.) Assume that $x.ec(i) = y$, $i \in \mathbb{Z}$. Then
   a. $x.\mathrm{I}\!\downarrow = y.\ni^{i}$ follows from: $.ec(i) \circledcirc (\ni^{i}) \subseteq (\geq)$ and $.ec(-i) \circledcirc (\geq) \subseteq (\ni^{i})$. (The same holds with $\overline{\ni}^{i}$ instead of $\ni^{i}$.)

b. $x.\overline{\epsilon}^{i} = y.\uparrow$ follows from: $.ec(i) \circledcirc (\leq) \subseteq (\overline{\epsilon}^{i})$ and $.ec(-i) \circledcirc (\overline{\epsilon}^{i}) \subseteq (\leq)$.

Cases (c) and (d) correspond to (b) and (a), respectively. □

Observations B: In addition, assume (b~10). (This condition is not asserted in pre-basic structures.)

1. $.ec$ is a well-founded map: If $x.ec(-i)$ exists then (by composition of $.ec(-i)$ and $\overline{\epsilon}$) $x\,\overline{\epsilon}^{1-i}\,\underline{r}$. It follows that there can only be finitely many natural i such that $x.ec(-i)$ exists.
   Note: Well-foundedness of $.ec$ is a consequence of well-foundedness of $\ni^{-1}$, see anti-membership.
2. If $x\,\epsilon^{k}\,x$ then $k \geq 0$. (The case $k < 0$ is again disallowed by (b~10).)
3. If $x.ec(i)\,\epsilon^{-j}\,x$ for natural i, j then $x\,\epsilon^{i-j}\,x$ and $j \leq i$. If x is well-founded then $i = j$.

Definitions in detail

This section provides detailed definitions for $\epsilon 5$-structures and thus for basic structures. The already introduced definitions are repeated. In many cases, the definitions make sense only together with additional assumptions. A distinguished collection of assumptions is formed by axioms of pre-basic structures.
Note: Definitions considered to be closely related to consistency conditions are provided in the next section.

Powerclass chains

- Let $.ec^{*}$ be the reflexive transitive closure of $.ec$. For a positive natural i,
  - $.ec(i)$ is the i-th composition of $.ec$ with itself,
  - $.ec(0)$ is the identity on $\underline{O}$,
  - $.ec(-i)$ is the inverse of $.ec(i)$.
- Let $.ce$, $.ce^{*}$, $.ce(i)$ be the the inverse of $.ec$, $.ec^{*}$, $.ec(i)$, respectively.
- Let $(.ec^{*-*}) = (.ec^{*}) \cup (.ce^{*})$.

For a set Y of objects, $Y.ce$ denotes the image of Y under $.ce$. For an object y (rather than a set of objects) we consider $y.ce$ to be defined and equal to x iff $\{x\} = \{y\}.ce$. Similarly with $.ec(i)$ or $.ce(i)$.

- Let $.pr$ be the map between objects such that: $x = y.pr \;\leftrightarrow\; \{x\} = y.ce^{*} \setminus \underline{O}.ec$.
- For an object x, (in each case assume that the value is defined)
  - $x.ec$ is the *powerclass* of x,
  - $x.ec^{*}$ is the *powerclass chain* of x,
  - $x.ce$ is the *powerclass predecessor* of x,
  - $x.pr$ is the *primary object* of x,
  - $x.eci$ is the *powerclass index* of x, defined by $x.eci = \sup\{i \mid \{x\}.ce(i) \neq \emptyset\}$.
    If $x.pr$ exists then: $x.eci = i \;\leftrightarrow\; x.pr.ec(i) = x$.
- $\mathcal{S}$ is *powerclass complete* if $.ec$ is a total map between objects, i.e. $\underline{O} = \underline{O}.ce$.

Object membership

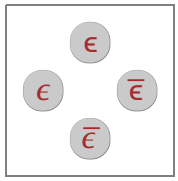

In the definitions below we consider that the first two definitory constituents of an $\epsilon 5$-structure are of the form $(\epsilon, \overline{\epsilon}^{(*)})$ where $\overline{\epsilon}^{(*)}$ is only left-infinite ($(\overline{\epsilon}^{(*)} = \{\overline{\epsilon}^{i} \mid i \in \mathbb{Z}, i \leq 1\}$). There are four membership relations between objects:

- ϵ, the *(object) membership*, is the first constituent of an $\epsilon 5$-structure,
- $\overline{\epsilon}$, the *power membership*, equals $\overline{\epsilon}^{1}$ from the definitory sequence $\overline{\epsilon}^{(*)}$.
- ϵ, the *bounded membership*, is defined by: $x\,\epsilon\,y \;\leftrightarrow\; x\,\epsilon\,y$ and $x.d < \underline{\varpi}$.
- $\overline{\epsilon}$ denotes the intersection $(\epsilon) \cap (\overline{\epsilon})$ (the *bounded power membership*).

For an integer i, the *i-th power* of ϵ / $\overline{\epsilon}$ / ϵ / $\overline{\epsilon}$ is denoted ϵ^{i} / $\overline{\epsilon}^{i}$ / ϵ^{i} / $\overline{\epsilon}^{i}$ and defined as follows.

For $i > 0$, ϵ^{i} / $\overline{\epsilon}^{i}$ / ϵ^{i} / $\overline{\epsilon}^{i}$ is the i-th relational composition of ϵ / $\overline{\epsilon}$ / ϵ / $\overline{\epsilon}$ with itself.
(E.g., $(\epsilon^{1}) = (\epsilon)$, $(\epsilon^{2}) = (\epsilon) \circledcirc (\epsilon)$.)

For $i \leq 0$,
- $\overline{\epsilon}^{i}$ is the i-th member (item) of the definitory sequence $\overline{\epsilon}^{(*)}$,
- $(\epsilon^{i}) = (\overline{\epsilon}^{i})$,
- ϵ^{i} is defined by: $x\,\epsilon^{i}\,y \;\leftrightarrow\; x\,\epsilon^{i}\,y$ and $x.d < \underline{\varpi}$,

- $(\overline{\epsilon}^i) = (\epsilon^i)$.

There are "one-way closures" and "two-way closures" of membership:

- $(\epsilon^*) = \bigcup\{\epsilon^i \mid i \in \mathbb{N}\}$, similarly for $\overline{\epsilon}$ / ϵ / $\overline{\epsilon}$, (note that due (b~0), ϵ^* is the transitive closure of $(\epsilon^0) \cup (\epsilon^1)$),
- $(\epsilon^{-*}) = \bigcup\{\epsilon^{-i} \mid i \in \mathbb{N}\}$,
- $(\overline{\epsilon}^{-*}) = (\epsilon^{-*})$ and $(\overline{\epsilon}^{*-*}) = (\overline{\epsilon}^*) \cup (\overline{\epsilon}^{-*})$.

The respective inverses of the above relations are denoted via reversed symbols:

ϵ / $\overline{\epsilon}$ / ϵ / $\overline{\epsilon}$ $\rightarrow$ $\ni$ / $\overline{\ni}$ / $\ni$ / $\overline{\ni}$.

We use "dot" notation for images under the above relations, both for objects and sets of objects. For an object x,

- $x.\ni$ is the set of *members* of x,
- $x.\overline{\ni}$ is the set of *power members* of x,
- $x.\ni$ is the set of *bounded members* of x,
- $x.\epsilon$ is the set of *containers* of x,
- $x.\overline{\epsilon}$ is the set of *power containers* of x.

An object x is said to be a *power member* (resp. *power container*) if $x.\epsilon = x.\overline{\epsilon} \neq \emptyset$ (resp. $x.\ni = x.\overline{\ni} \neq \emptyset$).

Inheritance

The *inheritance* relation, $\leq$, is the 0-th power of ϵ:

$(\leq) = (\epsilon^0) = (\overline{\epsilon}^0)$,

that is, $\leq$ is a special notation for the 0-th member of the definitory sequence $\overline{\epsilon}^{(*)}$. As usual, we use $<$ for the *strict inheritance*:

$x < y \leftrightarrow x \leq y$ and $x \neq y$.

Similarly, let $\geq$ and $>$ be the inverses of $\leq$ and $<$, respectively. There is also the *bounded inheritance* relation, ϵ^0, for which no special symbol is introduced. By the definitions made so far, ϵ^0 is the domain-restriction of $\leq$:

$x\ \epsilon^0\ y \leftrightarrow x \leq y$ and $x.d < \underline{\varpi}$.

We let $.\mathrm{I}$ and $.\mathrm{I}$ denote the image and preimage operators for $\leq$. We shall use these operators both for objects and sets of objects. For images of a single object under $<$ and $>$, the polar maps $.\wedge$ and $.\vee$ are used, respectively. For an object x,

- $x.\mathrm{I}$ is the set of *descendants* of x,
- $x.\vee$ is the set of *strict descendants* of x,
- $x.\ni^0$ is the set of *bounded descendants* of x, $x.\ni^0 = x.\mathrm{I} \cap \underline{O}.\ni$, (assuming $\underline{O} = \underline{O}.\ni$ for the equality)
- $x.\mathrm{I}$ is the set of *ancestors* of x,
- $x.\wedge$ is the set of *strict ancestors* of x, $x.\wedge = x.\mathrm{I} \setminus \{x\}$.

Polars of $\leq$

We also introduce notation for lower and upper bounds in $\leq$. First we extend the meaning of $\leq$ for relationship between sets of objects. For an object a and sets X, Y of objects,

- $X \leq Y$ iff $x \leq y$ for every $x \in X$ and $y \in Y$,
- $a \leq X$ iff $\{a\} \leq X$.

Similarly with $<$, $\geq$ and $>$. For a set X of objects, $X.\triangledown$ denotes the set of lower bounds of X, whereas $X.\vee$ is the set of strict lower bounds of X, similarly for upper bounds. That is,

- $X.\triangledown = \{x \mid x \leq X\}$, $X.\triangle = \{x \mid x \geq X\}$ ($.\triangledown$ and $.\triangle$ are the polar maps of $\leq$),
- $X.\vee = \{x \mid x < X\}$, $X.\wedge = \{x \mid x > X\}$ ($.\vee$ and $.\wedge$ are the polar maps of $<$).

Anti-membership

There is an "anti-relation" of $\overline{\epsilon}$:

- ϵ^{-1} is the *anti-membership* relation. (We might also consider ϵ^{-1} to be the *bounded anti-membership*.)

For an object x, $x.\ni^{-1}$ is the set of *anti-members* of x, and $x.\epsilon^{-1}$ is the set of *anti-containers* of x.

Recall the (b~10) axiom: For every object x, $x.mli$ (= $sup\ \{ i \mid x \in^{1-i} \underline{r},\ i \in \mathbb{N} \}$) is finite.

Observations: Assume axioms of pre-basic structures.

1. (b~10)   → $\ni^{-1}$ is a well-founded relation in which every object has a finite rank.
2. If $\in^{-i}$ equals the i-th relational composition of $\in^{-1}$ for every $i > 0$, then "↔" is satisfied in the previous observation.
3. $\underline{O}.\ni^{-1} = \underline{r}.\ni^{-1} \cup \underline{T}.\ni^{-1}$.

Distinguished sets of objects

In an ∊5-structure (even if axioms of basic structures are assumed), there is only one distinguished object whose existence is asserted – the inheritance root $\underline{r}$. However, there are several distinguished *sets* of objects:

- The set $\underline{O}$ is the set of all *objects*.
- The set $\underline{O}.\ni$ is the set of *bounded* objects.   (Again, we assume $\underline{O} = \underline{O}.\ni$ for this expression.)
- The set $\underline{O}.ec$ consists of *powerclasses*.
- The set $\underline{O}.pr = \underline{O} \setminus \underline{O}.ec$ is the set of *primary* objects.
- The set $\underline{T}$ of *terminal* objects (or *terminals*) is defined as $\underline{O} \setminus \underline{O}.\in.↧$.
- The set $\underline{R} = \underline{r}.ec^*$ (the powerclass chain of $\underline{r}$) is the *reduced helix*.
- The set $\underline{H} = \underline{r}.\in^*$ is the set of *helix* objects.
- The set $\underline{O}.\varepsilonɕ$ is the set of *primary singletons*.
- The set $\underline{O}.\varepsilon c$ is the set of *singletons*.   (See below for the definition of $.\varepsilon c$.)
- The set $\underline{C}$ of *classes* is defined as $\underline{O} \setminus (\underline{T} \cup \underline{O}.ec \cup \underline{O}.\varepsilonɕ)$.

Observations: Assume (a) reflexivity of $\leq$, (b) $(.ec) \subseteq (\overline{\in}) \subseteq (\in)$, (c) $(.\varepsilonɕ) \subseteq (\in) \setminus (.ec)$, (d) $\{x\}.\varepsilonɕ.\ni \subseteq \{x\}$.

1. $\underline{O}.pr = \underline{T} \uplus \underline{C} \uplus \underline{O}.\varepsilonɕ$.
2. $\underline{O} = \underline{T} \uplus \underline{C} \uplus \underline{O}.ec \uplus \underline{O}.\varepsilonɕ$.

Singletons

Recall the last definitory constituent of an ∊5-structure:

- $.\varepsilonɕ$ is a partial map between objects, $x.\varepsilonɕ$ (if defined) is the *primary singleton* of x.

The (derived) *singleton map* is denoted $.\varepsilon c$ and is defined as a partial map between objects by

- $x.\varepsilon c = y$ ↔ $\{x\} = y.\ni$ and y is from $(\underline{T}.ec \cup \underline{O}.\varepsilonɕ).ec^*$.

Objects from the image $\underline{O}.\varepsilon c$ are *singletons*. We say that $\mathcal{S}$ is

primary singleton complete if $x.\varepsilonɕ$ is defined for every object x from $\underline{O}.\ni \setminus (\underline{T} \cup \underline{O}.\varepsilon c)$,
singleton complete   if $x.\varepsilon c$ is defined for every object x from $\underline{O}.\ni$.

We call the sets $\underline{O}.\ni \setminus (\underline{T} \cup \underline{O}.\varepsilon c)$ and $\underline{O}.\ni$ the *potential domain* of $.\varepsilonɕ$ and $.\varepsilon c$, respectively. We let the integer powers, inverses and transitive closures of $.\varepsilonɕ$ and $.\varepsilon c$ be denoted and defined in a similar way to that of $.ec$. The 0-th power of $.\varepsilonɕ$ and $.\varepsilon c$ is defined as the identity on the respective potential domain. In particular,

- $.ɕ\varepsilon$ is the inverse of $.\varepsilonɕ$,
- $\underline{O}.ɕ\varepsilon$ is the set of objects with a defined primary singleton,
- $\underline{O}.\varepsilonɕ(0)$ (= $\underline{O}.\ni \setminus (\underline{T} \cup \underline{O}.\varepsilon c)$)   is the potential domain of $.\varepsilonɕ$.

The *primary singleton completion* provides the missing primary singletons for objects from $\underline{O}.\varepsilonɕ(0) \setminus \underline{O}.ɕ\varepsilon$.

Observations:

1. Condition (b~8)(a) is equivalent to $(.\varepsilonɕ) \subseteq (.\varepsilon c)$.
2. Assume (b~1), (b~4) and (b~8)(a)(c). Then $.\varepsilonɕ$ is obtained from $.\varepsilon c$:
   a. $(.\varepsilonɕ) = (.\varepsilon c) \setminus (.ec)$,
   b. $.\varepsilonɕ$ equals the range-restriction of $.\varepsilon c$ to $\underline{O}.pr$:

      $x.\varepsilonɕ = y$ ↔ $x.\varepsilon c = y$ and y is primary.

      In particular, a primary singleton is a singleton that is primary.
3. Assume all axioms of basic structures. Then the following are satisfied:
   - $.\varepsilon c.\ni^{-i} = .\varepsilon c.ec(i)$ for every natural i.   (By (b~7)(a).)
   - $.\varepsilon c.\in = .\varepsilon c.\overline{\in}$.   (By (b~7)(b).)

- $.\varepsilon c.\varepsilon c = \emptyset$. (By (b~8)(c) – A singleton has no primary singleton.)
- $.\varepsilon c.\varepsilon c = .\varepsilon c.ec$. (Powerclasses of singletons are singletons.)
- $\underline{T} \uplus \underline{O}.\varepsilon c = (\underline{T} \uplus \underline{O}.\varepsilon c).ec^*$. (An object x is terminal or a singleton iff $x.pr$ is terminal or a singleton.)

4. Assume that $\mathcal{S}$ is a singleton complete basic struture. Then
   - $.\epsilon = .\varepsilon c.\uparrow$. (That is, the bounded membership ϵ equals the composition $(.\varepsilon c) \circledcirc (\leq)$.)

Metalevels

For an object x, the *metalevel index* of x is denoted $x.mli$ and defined by

- $x.mli = sup\ \{i \mid x\ \epsilon^{1-i}\ \underline{r},\ i \in \mathbb{N}\}$.

That is, if $\underline{r}.\ni^{-i} \subseteq \underline{r}.\ni^{1-i}$ for every $i \in \mathbb{N}$ then $x.mli$ is the unique ordinal such that $x.mli \leq \omega$ and

- $x.mli > i \quad \leftrightarrow \quad x\ \epsilon^{-i}\ \underline{r}$ for every natural i.

For an ordinal number $i \leq \omega$, the *i-th metalevel* is the set of all objects whose metalevel index equals i.

Observations: Assume axioms of pre-basic structures.

1. The 0-th metalevel equals $\underline{T}$.
2. The 1-st metalevel contains $\underline{r}$.
3. The i-th metalevel, $i \in \mathbb{N}$, equals $\underline{r}.\ni^{1-i} \setminus \underline{r}.\ni^{-i}$. (A consequence of $\underline{r}.\ni^{-i} \subseteq \underline{r}.\ni^{1-i}$.)
4. If $t = \underline{r}.ec(i)$ then
   - $t.\ni \setminus t.\downarrow$ is the i-th metalevel, (with $t.ce$ the top if $i > 0$)
   - $t.\downarrow \setminus t.\ni^{-1}$ is the $(i+1)$-th metalevel with t as the top.
5. (Recall that $i + \omega = \omega$ for every integer i.)
   If $x\ \epsilon^i\ y$ for an integer i then $i + x.mli \geq y.mli$. (A consequence of $\underline{r}.\ni^{1-k}.\ni^i \subseteq \underline{r}.\ni^{i+1-k}$, $k \in \mathbb{N}$.) In particular,
   $x \leq y \rightarrow \quad x.mli \geq y.mli$,
   $x\ \epsilon\ y \rightarrow 1 + x.mli \geq y.mli$,
   $x.ec = y \rightarrow 1 + x.mli = y.mli$. (A consequence of $(.ec) \subseteq (\epsilon) \cap (\ni^{-1})$.)
   As a consequence, if $x.ec = y$ then: $x.mli = \omega \leftrightarrow y.mli = \omega$.
6. If, in addition, $(.\varepsilon c) \subseteq (\epsilon) \cap (\ni^{-1})$ (as asserted by (b~8)) then
   $x.\varepsilon c = y \rightarrow 1 + x.mli = y.mli$.
7. For every object x, if $x.mli < \omega$ then $x.pr$ exists.

Helix number

The *helix number* $\underline{h}$ of an $\epsilon 5$-structure is defined by

$\underline{h} = sup\ \{i + 1 \mid \underline{r}.\epsilon^i \neq \underline{r}.\epsilon^{i-1},\ i \in \mathbb{N}\}$.

Observations: Assume axioms of pre-basic structures and let $(\epsilon^\omega) = (\epsilon^*)$.

1. The helix number $\underline{h}$ equals the possibly infinite number of distinct images of $\underline{r}$ under natural powers of ϵ:
   $\emptyset = \cdots = \underline{r}.\epsilon^{-1} \subset \{\underline{r}\} = \underline{r}.\epsilon^0 \subset \cdots \subset \underline{r}.\epsilon^{-1+\underline{h}} = \underline{r}.\epsilon^{\underline{h}} = \cdots = \underline{H}$.
   (Recal that $\underline{H}$ denotes the set $\underline{r}.\epsilon^*$ of helix objects. Also recall that $i + \omega = \omega$ for every integer i.)
2. For every natural i,
   $i < \underline{h} \quad \leftrightarrow \quad \underline{r}.\epsilon^{i-1} \neq \underline{H} \quad \leftrightarrow \quad \underline{r}.\epsilon^i \neq \underline{r}.\epsilon^{i-1}$.
3. The helix number is at least 1. Moreover,
   $\underline{h} = 1 \quad \leftrightarrow \quad \underline{r}.\epsilon = \{\underline{r}\} = \underline{H}$,
   $\underline{h}$ is finite $\quad \leftrightarrow \quad \underline{r}.\epsilon^i = \underline{H}$ for some natural i.
4. The following less elegant definition of $\underline{h}$ can be used to avoid a reference to $\underline{r}.\epsilon^{-1}$. This can be useful in ϵ-based monotonic structures where ϵ^{-k}, $k > 0$, are derived from ϵ and $\leq$.
   $\underline{h} = 1$ if $\underline{H} = \{\underline{r}\}$,
   $\underline{h} = sup\ \{i + 2 \mid \underline{r}.\epsilon^i \neq \underline{H},\ i \in \mathbb{N}\}$ otherwise.

Rank

The *rank* of an object x is denoted $x.d$ and defined to be an ordinal number at most equal to a fixed limit ordinal ϖ according to the following prescription. Let W be the set of all objects z such that

(a) z is well-founded in ϵ and (b) for every a from $z.\ni^*.\ni^{-*}$, the metalevel index $a.mli$ is finite.

Then $.d$ is defined recursively using well-foundedness of (W, ϵ). For every object x,

$x.d = \varpi$ if $x \in \underline{O} \setminus W$,

$x.d = \varpi \wedge (sup\ \{a.d + 1 \mid a \epsilon x\} \vee sup\ \{a.mli + i\text{-}j \mid a \in x.\ni^i.\ni^{-j},\ i,j \in \mathbb{N}\})$ if $x \in W$.

Notes:

1. We use $\alpha \wedge \beta$ (resp. $\alpha \vee \beta$) to refer to the minimum (resp. maximum) of ordinal numbers α and β, see Preliminaries.
2. The (b) condition is implicitly satisfied in basic structures. It is shortly expressed as $z.\ni^*.\ni^{-*}.mli < \omega$.
3. The definition of $.d$ is better understood via the ranking product.

Observations: Assume axioms of pre-basic structures and apply the observations for metalevels.

1. For every object x, the following sets are identical: (Therefore, (ii) can be used for the definition of $.d$.)
   i. $\{i\text{-}j + a.mli \mid a \in x.\ni^i.\ni^{-j},\ i,j \in \mathbb{N}\}$,
   ii. $\{i\text{+}j + a.mli \mid a \in x.\ni^i.\ni^j,\ i,j \in \mathbb{Z}\}$.
2. For every object x satisfying $x.\ni^*.\ni^{-*}.mli < \omega$ the following set is identical to (i):
   (i') $\{i\text{-}j + a.mli \mid a \in x.\ni^i.\ni^{-j} \cap \underline{O}.pr,\ i,j \in \mathbb{N}\}$.
   Similarly, the additional condition of a being a primary object can be added to (ii).
3. If $\varpi = \omega$ then $x.d = sup\ \{i\text{-}j + a.mli \mid a \in x.\ni^i.\ni^{-j},\ i,j \in \mathbb{N}\}$.

Boundedness

Boundedness of objects is based on their rank.

- Objects x such that $x.d < \varpi$ are *bounded*, the remaining objects x (such that $x.d = \varpi$) are *unbounded*.
- A set X of objects is bounded (resp. unbounded) if $sup(X.d) < \varpi$ (resp. $sup(X.d) = \varpi$).
- The already introduced *bounded membership* relation, ϵ, is therefore the domain restriction of ϵ to bounded objects. If $\underline{O} = \underline{O}.\ni$ (as is asserted in basic structures) then $\underline{O}.\ni$ is the set of bounded objects.

Note in particular, that every object that is non-well-founded in ϵ is unbounded.

Power instance-of and the *.class* map

Recall that the set $\underline{C}$ of *classes* is defined as $\underline{O} \setminus (\underline{T} \cup \underline{O}.ec \cup \underline{O}.\varepsilon\epsilon)$.

- The $.class$ map is the (partial) map between objects given by

  $x.class = y$ iff y is the (unique) bottom of $x.\overline{\epsilon} \cap \underline{C}$,

  that is, $x.class$ equals the least power-container of x that is a class (whenever such an object exists). If $x.class = y$ then we say that y is *the class* of x. For an integer i we denote $.class(i)$ the i-th power of $.class$ defined in the usual way. That is,
  - for $i > 0$, $.class(i)$ is the i-th composition of $.class$ with itself,
  - for $i = 0$, $.class(i)$ is the identity map between objects,
  - for $i < 0$, $.class(i)$ is the inverse of $.class(-i)$.
- The *power instance-of* relation is the range-restriction of $\overline{\epsilon}$ to the set $\underline{C}$ of classes. That is, for every objects x, y,

  x is a power instance of y $\leftrightarrow$ $x\,\overline{\epsilon}\,y \in \underline{C}$.
- As a subrelation of the power instance-of relation, $.class$ is also called the *direct power instance-of* relation. For an object y, $\{y\}.class(-1)$ is the set of direct power instances of y.
- The *instance-of* relation is the range-restriction of ϵ to $\underline{C}$.

Note: The above definition of $.class$ is tailored to the case of monotonic structures in which $(\overline{\epsilon}) = (\epsilon)$. We did not introduce the "non-monotonic class" map correspondent to "direct instance-of".

Observations: Assume axioms of pre-basic structures.

1. Every object is a (power) instance of the inheritance root $\underline{r}$.
2. The $.class$ map is monotonic. That is, for every objects x, y such that both $x.class$ and $y.class$ are defined,

$x \le y \;\rightarrow\; x.class \le y.class$.

Consistency and completeness

This section is related to miscelaneous consistency conditions which express whether an $\epsilon 5$-structure resembles an $(\varpi+1)$-superstructure (that is, a complete structure of ϵ) in a particular respect.

ϵ-rank and ϵ-rank

The following auxiliary rank functions are based solely on ϵ / ϵ. For an object x, let

- $r_\epsilon(x)$ be the ϵ-*rank* of x defined recursively by

  $r_\epsilon(x) = \varpi \wedge sup\,\{r_\epsilon(a) + 1 \mid a \epsilon x\}$ if x is well-founded in ϵ,

  $r_\epsilon(x) = \varpi$ otherwise,

- $r_\epsilon(x)$ be the ϵ-*rank* of x defined recursively by

  $r_\epsilon(x) = sup\,\{r_\epsilon(a) + 1 \mid a \epsilon x\}$.

That is, $r_\epsilon(x)$ is the ϖ-limited rank of x w.r.t. ϵ, and $r_\epsilon(x)$ is the rank of x w.r.t. the well-founded relation ϵ. Moreover, for a set X of objects we let

- $r_\epsilon(X)$ be the ϵ-*rank* of X defined as $sup\,\{r_\epsilon(a) + 1 \mid a \in X\}$.

We say that an object x is ϵ-*ranked* (resp. ϵ-*ranked*) if $x.d = r_\epsilon(x)$ (resp. $x.d = r_\epsilon(x)$). An $\epsilon 5$-structure is ϵ-ranked (resp. ϵ-ranked) if so is every its object.

Observations:

1. For every object x,

   $r_\epsilon(x) \le r_\epsilon(x) \le x.d$. (In particular, being ϵ-ranked implies being ϵ-ranked.)

2. If $\underline{r}$ is ϵ-ranked then $r_\epsilon(\underline{O}) = \varpi+1$.

Groundedness

An object x is said to be

- ϵ-*grounded* if $x \in \underline{T}.\epsilon^*$, that is, $u\,\epsilon^i\,x$ for some terminal u and natural i,
- ϵ-*grounded* if $x \in \underline{T}.\epsilon^*$, that is, $u\,\epsilon^i\,x$ for some terminal u and natural i.

The whole $\epsilon 5$-structure $\mathcal{S}$ is ϵ-*grounded* if $\underline{T}.\epsilon^* = \underline{O}$ and ϵ-*grounded* if $\underline{T}.\epsilon^* = \underline{O}$.

Proposition A: Assume (a) $(\epsilon) = (\epsilon) \cup (\bar{\epsilon})$, (b) $(\le) \circledcirc (\bar{\epsilon}) \subseteq (\bar{\epsilon})$, and (c) $\underline{T} \subseteq \underline{O}.\ni$. (All of (a)–(c) are satisfied in basic structures.) Assume in addition that (d) $(\epsilon) = (\epsilon) \circledcirc (\epsilon^0)$.

1. For every natural i, ϵ^i is the domain-restriction of ϵ^i to bounded objects.
2. Corollary: If $\mathcal{S}$ is ϵ-grounded then $\mathcal{S}$ is ϵ-grounded.
   (More specifically, if $\mathcal{S}$ is ϵ-grounded then $\underline{T}.\epsilon^i = \underline{T}.\epsilon^i$ for every natural i.)

Proof:

1. For i equal 0 or 1 the statement holds by definition. We further proceed by induction. Assume that $i > 0$, $x\,\epsilon^i\,y \epsilon z$ and x is bounded. We should prove that $x\,\epsilon^{i+1}\,z$, that is, $x.\epsilon^i \cap z.\ni$ is non-empty. By induction assumption, $x\,\epsilon^i\,y$, so that $x\,\epsilon^{i-1}\,a \epsilon y$ for some a. By (c) there exist bounded b such that $a \epsilon b \le y$.
   - If y is bounded then $y \in x.\epsilon^i \cap z.\ni$.
   - If y is unbounded then, by (a), $y\,\bar{\epsilon}\,z$, therefore $b \epsilon z$, and consequently, $b \in x.\epsilon^i \cap z.\ni$. □

Proposition B: Assume (b~2), (b~3) and $\underline{O} = \underline{r}.\ni = \underline{r}.\bar{\ni}$. Then for every object x the following are satisfied:

1. x is ϵ-grounded $\rightarrow$ $x.mli < \omega$.
   Corollary: $\mathcal{S}$ is ϵ-grounded $\rightarrow$ $\mathcal{S}$ satisfies (b~10).
2. For and every natural i,
   a. x is ϵ-grounded and $i < x.mli$ $\rightarrow$ $\emptyset \ne x.\ni^i \le \underline{r}$.

b. x is ϵ-grounded and $i \le x.mli \quad \to \quad \emptyset \ne x.\ni^i$.

Proof:

1. Let x be and object. We show that: $x.mli = \omega \to x \notin \underline{T}.\epsilon^*$. Observe that
   a. $x.mli = \omega \quad \leftrightarrow \quad$ for every natural j, $x\,\epsilon^{1-j}\,\underline{r}$,
   b. for every object u and every natural i, j: $\quad i < j$ and $u\,\epsilon^i\,x\,\epsilon^{1-j}\,\underline{r} \quad \to \quad u\,\epsilon^{1+i-j}\,\underline{r} \quad \to \quad u \le \underline{r}$.

   As a consequence, if $x.mli = \omega$ then $x.\ni^i \le \underline{r}$ for every natural i, i.e. $x \notin \underline{T}.\epsilon^*$.
2. To show (a), assume that x is ϵ-grounded. If $i < x.mli$ then $x\,\overline{\epsilon}^{-i}\,\underline{r}$ and therefore $x.\ni^i \le \underline{r}$ (by $(\epsilon^i) \circledcirc (\overline{\epsilon}^{-i}) \subseteq (\le)$). Since $x.\ni^* \not\le \underline{r}$ by ϵ-groundedness of x it follows that $x.\ni^i$ must be non-empty. The (b) statement follows from (a). □

Extensional consistency

An object x is said to be *extensionally consistent* if for every object y, $\quad \emptyset \ne x.\ni \subseteq y.\ni \to x \le y$. The whole structure is extensionally consistent if so is every its object. That is, assuming the subsumption rule $(\epsilon) \circledcirc (\le) \subseteq (\epsilon)$, $\mathcal{S}$ is extensionally consistent iff the following equivalence is satisfied for every object x, y:

$x \le y \quad \leftrightarrow \quad x = y$ or $\emptyset \ne x.\ni \subseteq y.\ni$.

ϵ-levelling

We say that an object x is *ϵ-levelled* if x is ϵ-grounded (i.e. $x \in \underline{T}.\epsilon^*$) and

- $x.mli = min\,\{\, i \mid x \in \underline{T}.\epsilon^i,\ i \in \mathbb{N}\,\}$,

that is, (assuming $\underline{T} = \underline{T}.\epsilon^0$) the metalevel index of x equals the length of the shortest ϵ-path from $\underline{T}$ to x. The whole structure is *ϵ-levelled* if all its objects are ϵ-levelled.

Observations:

1. In a basic structure, an object x is ϵ-levelled $\quad \leftrightarrow \quad x \in \underline{T}.\epsilon^i \quad$ where $i = x.mli$.
2. For a basic structure $\mathcal{S}$ the following are equivalent:
   i. $\mathcal{S}$ is ϵ-levelled.
   ii. Every non-terminal object z has a bounded member u such that $u.mli + 1 = z.mli$. (That is, for every non-terminal z, $\quad z.mli \not\le z.\ni.mli$.)
   iii. For every natural i, the i-th metalevel equals $\underline{T}.\epsilon^i \cap \underline{r}.\ni^{1-i}$.

Proposition: If $\mathcal{S}$ is basic structure that is extensionally consistent and powerclass complete then $\mathcal{S}$ is ϵ-levelled.

Proof:

Assume that $\mathcal{S}$ is as in the antecedent of the proposition. Since the reduced helix $\underline{R}$ is complete it follows that for every natural i and every object x,

$x.mli \ge i+1 \quad \leftrightarrow \quad x \le \underline{r}.ec(i)$.

Assume for a contradiction that z is a non-terminal object such that $z.mli \le z.\ni.mli$. Let y be the top of the $(z.mli+1)$-th metalevel, i.e. $y = \underline{r}.ec(i)$ where $i = z.mli$. Then for every bounded object u, $\quad u \in y.\ni \leftrightarrow z.mli \le u.mli$. Therefore, $z.\ni \subseteq y.\ni$. By extensional consistency, $z \le y$, so that $z.mli \ge z.mli+1$ – a contradiction. □

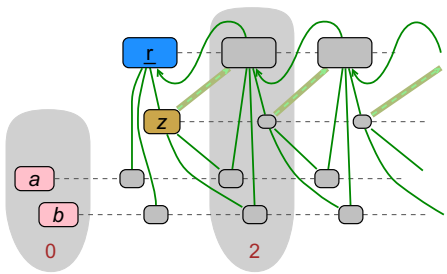

The diagram on the right shows a powerclass complete structure in which the z object (or any object from $z.ec^*$) is not ϵ-levelled. The dashed green arrows indicate pairs (x,y) for which the condition of extensional consistency is violated.

Powerclass consistency

We call an object x *powerclass-like* if

i. $x.\ni = x.\overline{\ni}$, and
ii. $x.\ni \cap Y.\triangle \ne \emptyset$ for every bounded subset Y of $x.\ni$.

An object x is said to be *powerclass consistent* if

x is powerclass-like $\rightarrow$ x is a powerclass.

The whole structure $\mathcal{S}$ is powerclass consistent if so is every its object.

Example. The diagram on the right shows a basic structure that is (a) powerclass complete and (b) extensionally consistent but in which the m object is not powerclass consistent. (Horizontal lines indicate the $.ec$ map, with implicit left-to-right orientation.)

For every natural i, $z_i.\mathfrak{l}$ $(= z_{i+1}.\ni = z_{i+1}.\ni)$ is the set of objects x from $m.\ni$ such that $x.d \leq i+1$. Therefore, if X is a bounded subset of $m.\ni$ and i is such that $X.d \leq i$ then $X \leq z_{i+1} \in m$, thus $X.\triangle \cap m.\ni$ is non-empty.

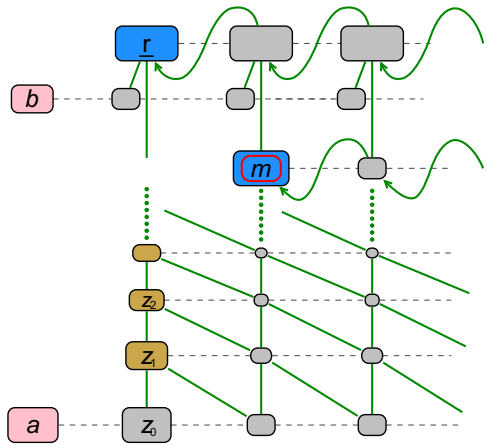

Observations: Assume that $\mathcal{S}$ is a basic structure.

1. If $\mathcal{S}$ is extensionally consistent and powerclass complete then: $x.\ni = x.\overline{\ni}$ $\leftrightarrow$ $x.\ni$ is a downset w.r.t. $\leq$. (Thus, (i) and (ii) say that $x.\ni$ is a *boundedly complete ideal*.)
2. Every singleton is powerclass consistent (and so is every terminal object).
3. If $\mathcal{S}$ is powerclass complete and extensionally consistent (as is the case of the above example) then every bounded object is powerclass consistent.

Combined consistency

For convenience, we introduce terminological shorthands. For every object x,

- x is *e+p consistent* if it is both extensionally consistent and both powerclass consistent.

Similarly, an $\epsilon 5$-structure $\mathcal{S}$ is e+p consistent if so is every its object.

Free leaf

We define a partial map $.\tau$ between objects by

$x.\tau = y$ $\leftrightarrow$ (a) x is terminal,
(b) y is a primary object whose metalevel index $k = y.mli$ is finite, and (y is unique such that:)
(c) $x.\overline{\epsilon}^{i} = y.\overline{\epsilon}^{i-k} \uplus \{x\}.ec(i)$ for every natural i.

If $x.\tau = y$ then we say that x is a *direct free leaf* of y. We use the $.\tau(-1)$ for the inverse of $.\tau$ so that $\{y\}.\tau(-1)$ is the set of direct free leaves of y. An object x for which $x.\tau$ is defined is called a *free leaf*.

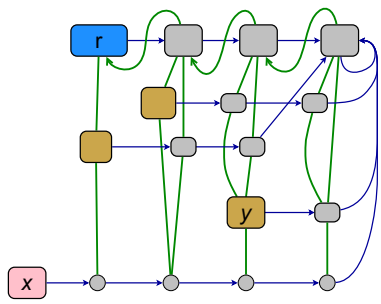

Proposition A: Assume axioms of pre-basic structures and $\underline{O}.mli < \omega$.

1. For every terminal object x there exists at most one pair (y,k) from $\underline{O}.pr \times \mathbb{N}$ such that (c) is satisfied. Moreover, if (y,k) is such a pair then $k = y.mli$.

Proof:

1. Assume that x is a terminal object, (y,k) is from $\underline{O}.pr \times \mathbb{N}$ and satisfies (c) and that (z,ℓ) is an alternative pair to (y,k). Then it follows from $x\,\overline{\epsilon}^{k}\,y$ that $z\,\overline{\epsilon}^{k-\ell}\,y$. Similarly, $x\,\overline{\epsilon}^{\ell}\,z \rightarrow y\,\overline{\epsilon}^{\ell-k}\,z$ so that $(y,z) \in (\overline{\epsilon}^{\ell-k}) \cap (\overline{\ni}^{k-\ell}) = .ec(\ell-k)$. Since both y and z are primary it follows that $(y,k) = (z,\ell)$. To show that $y.mli = k$ observe that for every integer i,
   - $y.mli > k-i$ $\leftrightarrow$ $y\,\overline{\epsilon}^{i-k}\,\underline{r}$ $\leftrightarrow$ $x\,\overline{\epsilon}^{i}\,\underline{r}$ $\leftrightarrow$ $i > 0$.

   The first equivalence is by definition of $.mli$, the second one is by (c) and the last one is by x being terminal. □

Proposition B: Assume axioms of basic structures.

1. If $x.\tau = y$ and $k = y.mli$ then $x.ec(k-1)$ is defined (in particular, y is non-terminal).
2. If $x.\tau = y$, $k = y.mli$ and n is a natural number such that both $a = x.ec(k+n-1)$ and $z = y.ec(n)$ exist then
   $a.\epsilon = z.\mathfrak{l} \uplus \{a\}.ec$.

3. For every object z, if $\ell = z.mli$ and $z.pr.\tau(-1).ec(\ell-1)$ has at least 2 elements then
   - z is e+p consistent (that is, z is both extensionally consistent and powerclass consistent).

Proof:

1. Assume $x.\tau = y$ and denote $k = y.mli$. Observe first that $k \neq 0$ (i.e. y is non-terminal) since otherwise $x.\uparrow = y.\uparrow \uplus \{x\} = \{x\} \uplus \{x\}$, a contradiction. It follows that $x\,\overline{\epsilon}^{k}\,y$ for some $k > 0$ and thus $x\,\overline{\epsilon}^{k-1}\,u\,\overline{\epsilon}\,y$ for some object u. By definition of $.\tau$,

   $$x.\overline{\epsilon}^{k-1} = y.\epsilon^{-1} \uplus \{x\}.ec(k-1)$$

   so that either $u \in y.\epsilon^{-1} \cap y.\overline{\ni}$ or $u = x.ec(k-1)$. The former case is equivalent to $u.ec = y$ which is disallowed by the definition of $.\tau$.
2. Let x, y, z, a, k and n be as in the antecedent of the proposition. It follows by boundedness of a and by (b~7)(b) that $a.\epsilon = a.\epsilon = a.\overline{\epsilon}$ and thus

   $$a.\epsilon = x.\overline{\epsilon}^{k+n} = y.\overline{\epsilon}^{n} \uplus \{a\}.ec = z.\uparrow \uplus \{a\}.ec.$$
3. Let z and ℓ be as in the antecedent of the proposition and let a and b be two different objects from $z.pr.\tau(-1).ec(\ell-1)$. By the previous proposition, $a.\epsilon = z.\uparrow \uplus \{a\}.ec$ and $b.\epsilon = z.\uparrow \uplus \{b\}.ec$. It follows that for every object u,

   $$z.\ni \subseteq u.\ni \quad \rightarrow \quad \{a,b\} \subseteq u.\ni \quad \rightarrow \quad z \leq u.$$

   This shows that z is extensionally consistent. To show the powerclass consistency of z, assume that z is primary and denote $X = \{a,b\}$. Since $a.\uparrow = z.\epsilon^{-1} \uplus \{a\}$ and $b.\uparrow = z.\epsilon^{-1} \uplus \{b\}$ it follows that

   $$X.\triangle = a.\uparrow \cap b.\uparrow = z.\epsilon^{-1}$$

   and thus $X.\triangle \cap z.\overline{\ni} = z.\epsilon^{-1} \cap z.\overline{\ni} = \emptyset$, i.e. X has no upper bound in $z.\ni$ so that z is not powerclass-like.

□

Completeness

(Assume that $\mathcal{S}$ is an $\epsilon 5$-structure such that $\underline{O} = \underline{O}.\ni$.) We say that $\mathcal{S}$ is

powerclass complete	if $x.ec$ is defined for every object x,
singleton complete	if $x.\varepsilon c$ is defined for every object x from $\underline{O}.\ni$,
metaobject complete	if $\mathcal{S}$ is both powerclass complete and singleton complete,
pre-complete	if $\mathcal{S}$ is a (i) basic structure that is (ii) metaobject complete, (iii) extensionally consistent, (iv) powerclass consistent, and (v) ϵ-ranked,
extensionally complete	if for every subset X of $\underline{O}.\ni$ there is an object x such that $x.\ni = X$,
complete	if $\mathcal{S}$ is pre-complete and extensionally complete.

Pre-basic structure

Many important properties of basic structures are consequences of a weaker collection of conditions than (b~1)–(b~11). Such a weaker collection is singled out in this section to form the family of pre-basic structures.

Pre-basic structure

By a *pre-basic structure* (of ϵ) we mean an $\epsilon 5$-structure $\mathcal{S} = (\underline{O}, \epsilon, \overline{\epsilon}^{(*)}, \underline{r}, .ec, .\varepsilon c)$ satisfying the following axioms:

(ß~1) $(\overline{\epsilon}) \subseteq (\epsilon)$.

(ß~2) $(\overline{\epsilon}^{i}) \circledcirc (\overline{\epsilon}^{j}) \subseteq (\overline{\epsilon}^{i+j})$ for every integer i, j.

(ß~3) $(\epsilon) \circledcirc (\epsilon^{i}) \subseteq (\epsilon^{1+i})$ for every integer i.

(ß~4) $(\overline{\epsilon}^{i}) \cap (\overline{\ni}^{-i}) = .ec(i)$ for every integer i.

(ß~5) $\underline{O}.\epsilon \leq \underline{r}$.

(ß~6) $\underline{O}.\overline{\ni} = \underline{O}$.

(ß~7) $\underline{T}.\ni^{-i} \cap \underline{r}.\ni^{-i} = \emptyset$ for every natural i.

Observations:

1. $\underline{r} \overline{\epsilon} \underline{r}$, $\underline{O} = \underline{r}.\ni = \underline{r}.\overline{\ni}$.
2. Every basic structure is a pre-basic structure.
3. Terminal objects are those that have rank 0.

Proof:

3. For every terminal x, $x.\ni = \emptyset$ and (as a consequence) $x.\ni^*.\ni^{-*} = x.\ni^{-*}$ so that
   - $x.d = sup\ \{a.mli - i \mid a \in x.\ni^{-i}\}$.

   Since by (6~7), $a\ \epsilon^{-i}\ x \rightarrow a.mli \leq i$, it follows that $x.d = x.mli - 0 = 0$.
   Conversely, if x is non-terminal then $x.mli > 0$, and (since $z.mli \leq z.d$ for every object z) thus $x.d > 0$.

□

Groundedness vs ϵ-rank

Proposition: In a pre-basic structure $\mathcal{S}$, the following are equivalent:

i. $\mathcal{S}$ is ϵ-ranked. (I.e. $x.d = r_\epsilon(x)$ for every object x.)

ii. For every object x that is well-founded in ϵ,
   a. $x.mli < \omega$ (x has finite metalevel index), and
   b. $x \in \underline{T}.\epsilon^*$ (x is ϵ-grounded).

Proof:

i→ii.

Assume (i) and let x be an object that is well-founded in ϵ. By definition of well-foundedness, there is an object a from $x.\ni^*$ such that $r_\epsilon(a) = 0$. Since

$r_\epsilon(a) = 0 \leftrightarrow a.d = 0 \leftrightarrow a \in \underline{T}$ (the latter equality is by the observation made for pre-basic structures)

it follows that $x \in \underline{T}.\epsilon^*$. The $x.mli < \omega$ condition then follows by proposition B1.

i←ii.

Assume (ii). By simple observation, (in any pre-basic structure) the set of objects that are well-founded in ϵ is closed w.r.t. $.\ni^*.\ni^{-*}$, so that (a) is equivalent to

(a') $a.mli < \omega$ for every $a \in x.\ni^*.\ni^{-*}$.

This simplifies the definition of $.d$ so that for every object x,

$x.d = r_\epsilon(x) = \underline{\omega}$ if x is non-well-founded in ϵ. Otherwise (if x is well-founded):

$x.d \quad = \underline{\omega} \wedge (sup\ \{a.d + 1 \mid a\ \epsilon\ x\} \vee sup\ \{a.mli + i\text{-}j \mid a \in x.\ni^i.\ni^{-j},\ i,j \in \mathbb{N}\})$,

$r_\epsilon(x) \quad = \underline{\omega} \wedge sup\ \{r_\epsilon(a) + 1 \mid a\ \epsilon\ x\}$.

Let x be an object that is well-founded in ϵ and denote A, B and A' the respective sets over which the suprema in the definitions of $x.d$ and $r_\epsilon(x)$ are taken, thus

$x.d \quad = \underline{\omega} \wedge (sup(A) \vee sup(B))$,

$r_\epsilon(x) = \underline{\omega} \wedge sup(A')$.

By well-founded recursion we can assume that $a.d = r_\epsilon(a)$ for every $a\ \epsilon\ x$, so that $A = A'$. As a consequence, $r_\epsilon(x) \leq x.d$. It remains to show that $r_\epsilon(x) \geq sup(B)$, that is, for every $m \in B$,

(∗) there exists a pair (b,n) from $\underline{O} \times \mathbb{N}$ such that (a) $b\ \epsilon^n\ x$ and (b) $n \geq m$.

Let m be from B and let (a,i,j) be a corresponding triple from $\underline{O} \times \mathbb{N} \times \mathbb{N}$ such that $a \in x.\ni^i.\ni^{-j}$ and $m = a.mli + i\text{-}j$. Since a is ϵ-grounded, there is a pair (b,k) from $\underline{T} \times \mathbb{N}$ such that $b\ \epsilon^k\ a$. Denote $n = k + i\text{-}j$. Then the pair (b,n) is the requested pair from (∗):

a. $b\ \epsilon^n\ x$ (since $k \geq j$ – a consequence of $b \in \underline{T}$, so that $b.\epsilon^k.\epsilon^{-j}.\epsilon^i \subseteq b.\epsilon^{k-j}.\epsilon^i \subseteq b.\epsilon^{k-j+i}$),
b. $n \geq m$ (since $k \geq a.mli$ – use the observation about $.mli$, apply $b.mli = 0$). □

Metaobject structure

The diagram on the right shows a basic structure that is metaobject complete – the powerclass map $.ec$ (shown by horizontal blue arrows) is total and the singleton map $.\varepsilon c$ (shown by blue arrows pointing to a circle which indicates a singleton) is defined on the set $\underline{O}.\ni$ of bounded objects. We have already observed that (a) in a powerclass complete basic structure, all powers of $\overline{\epsilon}$ are given by

$(\overline{\epsilon}^i) \quad = \quad (\leq) \circledcirc .ec(i) \circledcirc (\leq)$, (in particular, $(\overline{\epsilon}) = (.ec) \circledcirc (\leq)$)

and that (b) in a singleton complete basic structure the bounded membership ϵ is given by

$$(\epsilon) \;=\; (.\varepsilon c) \circledcirc (\leq).$$

Subsequently, using the last axiom of basic structures, the object membership is given by $(\epsilon) = (\epsilon) \cup (\bar{\epsilon})$. Since $(.\varepsilon\wp) = (.\varepsilon c) \setminus (.ec)$ it follows that a metaobject complete basic structure is fully determined by $\leq$, $.ec$ and $.\varepsilon c$. The following subsection provides an axiomatization based on these three constituents.

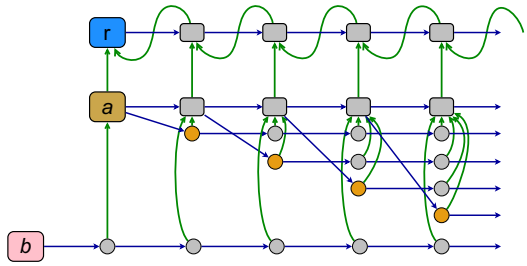

Metaobject structure

By a *metaobject structure* we mean a structure $\mathcal{S} = (\underline{O}, \leq, \underline{r}, .ec, .\varepsilon c)$ where

- $\underline{O}$ is a set of *objects*,
- $\leq$ is the *inheritance* relation between objects,
- $\underline{r}$ is the *inheritance root*, a distinguished object,
- $.ec$ is the *powerclass* map $\underline{O} \to \underline{O}$ (objects from $\underline{O}.ec$ are *powerclasses*),
- $.\varepsilon c$ is the *singleton* (partial) map $\underline{O} \curvearrowright \underline{O}$ (objects from $\underline{O}.\varepsilon c$ are *singletons*).

Denote $\underline{T} = \{ x \mid x \nleq r \}$ the set of *terminal* objects and let $.ec^*$ denote the reflexive transitive closure of $.ec$.

The structure is subject to the following axioms ($*$):

(mo~1) Inheritance, $\leq$, is a partial order.

(mo~2) The powerclass map, $.ec$, is an order-embedding of $(\underline{O}, \leq)$ into itself.

(mo~3) Objects from $\underline{T}.ec^*$ are minimal in $\leq$.

(mo~4) Every powerclass is a descendant of $\underline{r}$.

(mo~5) The set $\underline{r}.ec^*$ has no lower bound in $\leq$.

(mo~6) The singleton map, $.\varepsilon c$, is injective.

(mo~7) Objects from $\underline{O}.\varepsilon c.ec^*$ are minimal in $\leq$.

(mo~8) For every objects x, y such that $x.\varepsilon c$ is defined, $\quad x.\varepsilon c \leq y.ec \quad \leftrightarrow \quad x \leq y$.

(mo~9) For every object x, $\quad x.\varepsilon c$ is defined $\quad \leftrightarrow \quad x.d < \underline{\varpi}$.

($*$) The definitions introduced before the axioms are sufficient to state all axioms except the last one. The definition of the rank function, $.d$, used in the last axiom is provided below. Assume that (mo~1)–(mo~8) are satisfied.

Let ϵ, $\bar{\epsilon}$ and ϵ be relations between objects with the following definition and terminology:

$(\epsilon) = (.\varepsilon c) \circledcirc (\leq)$ is the *bounded membership*,
$(\bar{\epsilon}) = (.ec) \circledcirc (\leq)$ is the *power membership*,
$(\epsilon) = (\epsilon) \cup (\bar{\epsilon})$ is the *(object) membership*.

For an integer i, let $.ec(i)$ be the i-th composition of $.ec$ with itself if $i \geq 0$ (with $.ec(0)$ being the identity on $\underline{O}$) and the $-i$-th composition of the inverse of $.ec$ otherwise. Similarly with $.\varepsilon c(i)$, but with $.\varepsilon c(0)$ being the identity on $\underline{O}.\ni$. Subsequently, let ϵ^i, $\bar{\epsilon}^i$ and ϵ^i be the *i-th power* of ϵ, $\bar{\epsilon}$ and ϵ, respectively, defined as follows:

$(\epsilon^i) = \quad .\varepsilon c(i) \circledcirc (\leq)$, (for $i < 0$ we let $(\epsilon^i) = (\epsilon^0) \circledcirc .ec(i)$)
$(\bar{\epsilon}^i) = (\leq) \circledcirc .ec(i) \circledcirc (\leq)$,
$(\epsilon^i) = (\epsilon^i) \cup (\bar{\epsilon}^i)$.

The *metalevel index*, $x.mli$, and *rank*, $x.d$, of an object x are then defined like in basic structures by

$x.mli = sup \{ i \mid x\, \epsilon^{1-i}\, \underline{r},\ i \in \mathbb{N} \}$,
$x.d \;= \underline{\varpi}$ if x is non-well-founded in ϵ,
$x.d \;= \underline{\varpi} \wedge (sup \{a.d + 1 \mid a\, \epsilon\, x\} \vee sup \{a.mli + i\text{-}j \mid a \in x.\ni^i.\ni^{-j},\ i,j \in \mathbb{N}\})$ if x is well-founded in ϵ.

The correspondence

Proposition: There is the following one-to-one (definitional) correspondence between metaobject structures and metaobject complete basic structures:

I. If $\mathcal{S} = (\underline{O}, \leq, \underline{r}, .ec, .\varepsilon c)$ is a metaobject structure then the $\in$5-structure $\mathcal{S}' = (\underline{O}, \in, \overline{\in}^{(*)}, \underline{r}, .ec, .\varepsilon\varsigma)$ derived from $\mathcal{S}$ is basic structure that is metaobject complete. The "new" constituents of $\mathcal{S}'$ are defined as follows:

$(\in) \quad = ((.ec) \cup (.\varepsilon c)) \odot (\leq)$, (= $(\overline{\in}) \cup ((.\varepsilon c) \odot (\leq))$, see the proof below)

$(\overline{\in}^{i}) \quad = (\leq) \odot .ec(i) \odot (\leq)$ for every integer $i \leq 1$, (($\ast$) and also for $i > 1$, see the proof below)

$(.\varepsilon\varsigma) = (.\varepsilon c) \setminus (.ec)$.

II. If $\mathcal{S} = (\underline{O}, \in, \overline{\in}^{(*)}, \underline{r}, .ec, .\varepsilon\varsigma)$ is a metaobject complete basic structure then $\mathcal{S}' = (\underline{O}, \leq, \underline{r}, .ec, .\varepsilon c)$ is a metaobject structure. The "new" constituents of $\mathcal{S}'$ are defined as follows:

$(\leq) \quad = (\overline{\in}^{0})$,

$(.\varepsilon c) = (\in) \cap (\underline{O} \times (\underline{T} \cup \underline{O}.\varepsilon\varsigma).ec{*})$. (We can equivalently write $\underline{T}.ec$ instead of $\underline{T}$.)

Proof:

I. Let $\mathcal{S}$ and $\mathcal{S}'$ be as in (I). Since $(\leq) \odot (.ec) = (.ec) \odot (\leq)$ by (mo~2), it follows that for every natural i, $(\leq) \odot .ec(i) \odot (\leq)$ is the i-th relational composition of $\overline{\in}$ with itself (which equals $\overline{\in}^{i}$ by definitional extension of $\in$5-structures) so that ($\ast$) is satisfied for every integer i. Moreover, it follows that for every natural i,

$(\overline{\in}^{i}) \;= (\leq) \odot .ec(i) \;= .ec(i) \odot (\leq)$,

$(\overline{\in}^{-i}) = (\leq) \odot .ec(-i)$.

Subsequently, (b~1)–(b~11) are verified as follows.

1. (b~1) (i.e. $(\overline{\in}) \subseteq (\in)$) follows by the definition of $\in$.
2. (b~2) is satisfied as a consequence of transitivity of $\leq$ and compositional commutativity of $\leq$ and $.ec$ so that

   $(\overline{\in}^{i}) \odot (\overline{\in}^{j}) = (\overline{\in}^{i+j})$ for every integer i, j.
3. To prove (b~3) it is sufficient (using the equality above) to prove that

   (a) $(\in) \odot (\leq) \subseteq (\in)$ and (b) $(\in) \odot (\in^{-1}) \subseteq (\leq)$.

   (a) follows by transitivity of $\leq$. To show (b) apply definitions of $\in$ and $\in^{-1}$ and (mo~8):

   $$\begin{aligned}(\in) \odot (\in^{-1}) &= ((\overline{\in}) \cup ((.\varepsilon c) \odot (\leq))) \quad \odot \quad (\in^{-1})\\ &= ((\overline{\in}) \odot (\overline{\in}^{-1})) \cup ((.\varepsilon c) \odot (\leq) \odot (\in^{-1}))\\ &= (\leq) \cup ((.\varepsilon c) \odot (\leq) \odot .ec(-1))\\ &= (\leq) \quad \text{(since by (mo~8), } \{x\}.\varepsilon c.\uparrow.ec(-1) \subseteq x.\uparrow \text{ for every object } x\text{).}\end{aligned}$$

   Moreover, since $(\in) \odot (\in^{-1}) = (\in) \odot .ec(-1)$ it follows that

   $(\geq) = (.ec) \odot (\ni)$.
4. Axiom (b~4) follows by antisymmetry and reflexivity of $\leq$. For every natural i,
   - $(\overline{\in}^{i}) \cap (\overline{\ni}^{-i}) = .ec(i) \odot ((\leq) \cap (\geq)) = .ec(i)$,
   - $(\overline{\ni}^{i}) \cap (\overline{\in}^{-i}) = ((\geq) \cap (\leq)) \odot .ec(-i) = .ec(-i)$.
5. To prove (b~5) (i.e. $\underline{O}.\in \leq \underline{r}$), proceed as follows.
   - $\underline{O}.ec \leq \underline{r}$. (By (mo~4).)
   - $\underline{O}.ec.\uparrow \leq \underline{r}$. (Since for $\underline{O}.ec \ni x < t \nleq \underline{r}$, t would be a non-minimal terminal object ($\ast$), violating (mo~3).)
   - $\underline{O}.\varepsilon c.\uparrow \leq \underline{r}$. (Since $\underline{O}.\varepsilon c \subseteq \underline{O}.ec.\downarrow$ by (mo~8).)
   - $\underline{O}.\in \leq \underline{r}$. (Since by definition of $\in$, $\underline{O}.\in = \underline{O}.ec.\uparrow \cup \underline{O}.\varepsilon c.\uparrow$.)

   In ($\ast$), we have used the term "terminal object" according to the definition in the metaobject structure $\mathcal{S}$. However, the definitions of the set $\underline{T}$ of terminal objects in $\mathcal{S}$ and $\mathcal{S}'$ are coincidient: Since $\underline{r} \in \underline{r}$ (as consequence of $\underline{r}.ec \leq \underline{r}$) it follows that $\underline{O}.\in.\downarrow = \underline{r}.\downarrow$.
6. Axiom (b~6) ($\underline{O}.\ni = \underline{O}$) follows by $x \,\overline{\in}\, \underline{r}$ for every object x (a consequence of $x.ec \leq \underline{r}$ asserted by (mo~4)).
7. To prove (b~7)(a) ($x.\ni^{-i} = \{x\}.ec(i)$ for every x from $\underline{T} \cup \underline{O}.\varepsilon\varsigma$ and every natural i), assume that $x \in \underline{T} \cup \underline{O}.\varepsilon\varsigma$. Then for every natural i,

   $$\begin{aligned}x.\ni^{-i} &= x.ec(i).\downarrow \quad &&\text{(since } (\in^{-i}) = (\overline{\in}^{-i}) = (\leq) \odot .ec(-i) \text{ and thus } (\ni^{-i}) = .ec(i) \odot (\geq)\text{)}\\ &= \{x\}.ec(i) &&\text{(since } (.\varepsilon\varsigma) \subseteq (.\varepsilon c) \text{ and thus } \underline{O}.\varepsilon\varsigma \subseteq \underline{O}.\varepsilon c \text{ so that } x.ec(i) \text{ is from } (\underline{T} \cup \underline{O}.\varepsilon c).ec{*}\\ & &&\text{and therefore } x.ec(i) \text{ is minimal in } \leq \text{ due to (mo~3) and (mo~7)).}\end{aligned}$$
8. Let us prove (b~7)(b), i.e. if X denotes the set $(\underline{T} \cup \underline{O}.\varepsilon\varsigma).ec{*}$ then $x.\in = x.\overline{\in}$ for every $x \in X$. That is, we have to show that $\{x\}.\varepsilon c.\uparrow \subseteq x.ec.\uparrow$ for every $x \in X$. Since $\{x\}.\varepsilon c \leq \{x\}.ec$ for every object x (by (mo~8)), it follows that

   $\{x\}.\varepsilon c.\uparrow \nsubseteq x.ec.\uparrow \quad \leftrightarrow \quad x.\varepsilon c$ is defined and $x.\varepsilon c < x.ec$.

By (mo~3) and (mo~7), the last strict inequality is disallowed for objects x from $(\underline{T} \cup \underline{O}.\varepsilon c).ec*$ and thus for all x from X.

9. Let us prove (b~8), that is, assume that x, y are objects such that $x.\varepsilon\varsigma = y$ and show that

   (a) $\{x\} = y.\ni$, (b) $x.\in^{i} = y.\in^{i-1}$ for every $i \leq 1$, (c) $(x,y) \notin (.ec)$.

   The (c) property follows by definition of $.\varepsilon\varsigma$. Since $(.\varepsilon\varsigma) \subseteq (.\varepsilon c)$, it follows in the first place that $x.\varepsilon c = y$. By definition, $x.\in = \{x\}.\varepsilon c.\uparrow \cup x.ec.\uparrow$. Since $x.\varepsilon c$ is defined and $x.\varepsilon c \leq x.ec$ it follows that (b) is satisfied for $i = 1$. For $i \leq 0$, use

   $x \leq u.ec(-i) \quad \leftrightarrow \quad x.\varepsilon c \leq u.ec(-i).ec$

   which holds by (mo~8) for every object u. To show (a), assume that u is an object such that $u \in y$, that is, (by definition of $\in$) $u.\varepsilon c \leq y$ or $u.ec \leq y$. By (mo~7), y is minimal in $\leq$ so that $u.\varepsilon c = y$ or $u.ec = y$. The latter case is impossible because $u.ec = y \ni x$ implies $x \leq u$ (by $(\geq) = (.ec) \circledcirc (\ni)$ proved before) so that either

   - $x = u$ and thus $(x,y) \in (.\varepsilon\varsigma) \cap (.ec)$ – which contradicts the definition $(.\varepsilon\varsigma) = (.\varepsilon c) \setminus (.ec)$, or
   - $x < u$ which would imply $x.ec < u.ec = y$ – which would in turn violate the minimality of y.

   It follows that $u.\varepsilon c = y$ and therefore, since (mo~6) asserts the injectivity of $.\varepsilon c$, $u = x$. That is, (a) is satisfied.

10. To show (b~10) ($x.mli$ is finite for every object x), apply $(\overline{\ni}^{1-i}) = .ec(i-1) \circledcirc (\geq)$ to the definition of $.mli$:

    $x.mli = sup\ \{i \mid x \leq \{\underline{r}\}.ec(i-1)\ \}$.

    Since $\{\underline{r}\}.ec(i-1) \ \leq\ \{\underline{r}\}.ec(k-1)$ for every natural $k \leq i$ (by $\underline{r} \in \underline{r}$ and $.ec$ being an order embedding) it follows that

    $x.mli$ is finite $\leftrightarrow$ $x \nleq \underline{r}.ec*$.

    That is, (b~10) is asserted by (mo~5).

11. It remains to verify that (b~11) is satisfied. Note that the rank functions in $\mathcal{S}$ and $\mathcal{S}'$ are identical since they have identical prescriptions based on $\in$ and $\overline{\in}^{(*)}$. By (mo~9), for every object x,

    $x.\varepsilon c$ is undefined $\leftrightarrow$ $x.d = \underline{\varpi}$.

    Therefore, if $x.d = \underline{\varpi}$ then $x.\in = x.ec.\uparrow = x.\overline{\in}$.

    Finally, it also follows that $(.\varepsilon c) \circledcirc (\leq)$ is the domain-restriction of $\in$ to objects x such that $x.d < \underline{\varpi}$, so that the bounded membership relation ϵ in $\mathcal{S}$ is coincident with that in $\mathcal{S}'$.

II. Assume that $\mathcal{S} = (\underline{O}, \in, \ldots)$ is a metaobject complete basic structure and let $\mathcal{S}' = (\underline{O}, \leq, \underline{r}, .ec, .\varepsilon c)$ be the correspondent reduct of a definitional extension of $\mathcal{S}$. Then except for (mo~5), all of (mo~1)–(mo~9) either directly follow from the definition of a basic structure or are obtained as observations that have already been made. The (b~10)↔(mo~5) correspondence is established like in the proof of (I) using

$x.mli$ is finite $\leftrightarrow$ $x \nleq \underline{r}.ec*$. ☐

Grounded metaobject structure

Because metaobject structures are definitionally equivalent to metaobject complete basic structures, the definitions introduced for $\in 5$-structures apply to metaobject structures. In particular, a metaobject structure $\mathcal{S}$ is *grounded* iff $\underline{T}.\in* = \underline{O}$. Since

$(\epsilon) = (\epsilon) \circledcirc (\epsilon^{0})$ (a consequence of $(\epsilon) = (.\varepsilon c) \circledcirc (\leq)$),

there is no distinction between $\in$-groundedness and ϵ-groundedness: $\underline{T}.\in* = \underline{O} \leftrightarrow \underline{T}.\epsilon* = \underline{O}$ (see proposition A2). Moreover,

- by proposition B1, the groundedness condition makes (mo~5) ($\underline{R}.\triangledown = \emptyset$) redundant, and
- by groundedness in pre-basic structures, every grounded basic structure is $\in$-ranked.

As a consequence, grounded metaobject structures can be axiomatized with (mo~5) and (mo~9) replaced as follows:

(mo~5)' $\underline{T}.\in* = \underline{O}$.

(mo~9)' For every object x, $x.\varepsilon c$ is defined $\leftrightarrow$ $r_{\epsilon}(x) < \underline{\varpi}$.

Monotonic structures

Basic structures in which $(\overline{\epsilon}) = (\epsilon)$ are *monotonic*. Most object models in object oriented programming have core parts that can be considered to be specializations of monotonic basic structures. The $(\overline{\epsilon}) = (\epsilon)$ equality yields the monotonicity of ϵ:

$(\leq) \circledcirc (\epsilon) \subseteq (\epsilon)$, that is, for every objects x, y, $x \leq y \rightarrow x.\epsilon \supseteq y.\epsilon$.

If every object x has a least container (as is the case of object models in OOP), i.e. $x.\epsilon = x.lc.\mathrm{I}$ for a map $.lc$, then the monotonicity condition further translates to $x \leq y \rightarrow x.lc \leq y.lc$.

There are two distinguished subfamilies of monotonic structures given by whether $.ec$ is empty or total:

	Family of structures	Used in	Monotonicity condition
$.ec$ is empty	Monotonic primary structure	Python	$x \leq y \rightarrow x.class \leq y.class$
$.ec$ is total	Monotonic eigenclass structure	Ruby	$x \leq y \rightarrow x.ec \leq y.ec$

Notes: In [9] and [10], core parts of objects models of Ruby, Python, Java, Scala, Smalltalk-80, Objective-C, CLOS, Perl and JavaScript are considered to be specializations of monotonic structures. However, only Ruby and Python can be regarded as fully conformant to the description provided below.

1. In Smalltalk-80 and CLOS, there are built-in monotonicity breaks.
2. In languages with a partial support of $.ec$ (Smalltalk-80, Objective-C and Scala), there is no notational or terminological distinction between $.ec$ and $.class$.
3. In Java and Scala (which are not generally considered to belong to dynamic programming languages) there is no established consensus about whether these languages support the *classes are objects* paradigm.
4. To capture the core structure of JavaScript [11], one needs to introduce *prototypes* as additional objects on the 0th metalevel which are powerclass predecessors of objects from the 1st metalevel.
5. The Perl 5 programming language *can* be regarded to support monotonic primary structure such that

   $(\epsilon) = (\leq) \setminus \underline{T}^2$ (i.e. $x \epsilon y \leftrightarrow x \leq y \notin \underline{T}$)

   where ϵ is exactly what can be detected by the `isa` introspection method. As a consequence, every non-terminal object x is circular: $x \epsilon x$. However, there is no evidence (known to the author) whether the above equality between membership and inheritance is a designed feature of the language.
6. Objective-C supports multiple inheritance roots (`Object`, `NSObject` and `NSProxy`). As of Pharo 1.3, Smalltalk-80 contains a subsidiary inheritance root (`PseudoContext`).

Monotonic structure

By a *monotonic structure* (of ϵ) we mean a structure $\mathcal{S} = (\underline{O}, \epsilon^{(*)}, \underline{r}, .ec)$ where

- $\underline{O}$ is a set of *objects*,
- $\epsilon^{(*)}$ is a sequence $\{ \epsilon^i \mid i \in \mathbb{Z}, i \leq 1 \}$ of relations between objects, with ϵ^0 and ϵ^1 distinguished:
  - $(\leq) = (\epsilon^0)$ is the *inheritance* relation (with $.\mathrm{I}$ / $.\mathrm{I}$ used for preimages / images under $\leq$),
  - $(\epsilon) = (\epsilon^1)$ is the *(object) membership* relation,
- $\underline{r}$ is the *inheritance root*, a distinguished object,
- $.ec$ is the (partial) *powerclass* map $\underline{O} \curvearrowright \underline{O}$ (objects from $\underline{O}.ec$ are *powerclasses*).
  (Alternative terminology: $.ec$ is the *eigenclass* map and objects from $\underline{O}.ec$ are *eigenclasses*.)

For every natural $i > 0$, let ϵ^i be the i-th relational composition of ϵ with itself, $.ec(i)$ be the i-th composition of $.ec$ with itself, and $.ec(-i)$ be the inverse of $.ec(i)$. Let $.ec(0)$ be the identity on $\underline{O}$. Let $\underline{T} = \underline{O} \setminus \underline{O}.\epsilon.\mathrm{I}$ be the set of *terminal* objects. Let the *metalevel index* of an object x be denoted and defined like in basic structures, i.e.

$x.mli = sup \{i \mid x \epsilon^{1-i} \underline{r}, i \in \mathbb{N}\}$.

The structure is subject to the following axioms:

(m~1) $(\epsilon^i) \circledcirc (\epsilon^j) \subseteq (\epsilon^{i+j})$ for every integer i, j.

(m~2) $(\epsilon^i) \cap (\ni^{-i}) = .ec(i)$ for every integer i.

(m~3) $\underline{O}.\epsilon \leq \underline{r}$.

(m~4) $\underline{O} = \underline{O}.\ni$.

(m~5) For every object x from $\underline{T}$ and every natural i, $\{x\}.ec(i) = x.\ni^{-i}$.

(m~6) For every object x, the metalevel index $x.mli$ is finite.

The correspondence

Proposition:

1. If $\mathcal{S} = (\underline{O}, \epsilon, \overline{\epsilon}^{(*)}, \underline{r}, .ec, .\varepsilon\varsigma)$ is a basic structure then its reduct $\mathcal{S}' = (\underline{O}, \overline{\epsilon}^{(*)}, \underline{r}, .ec)$ is a monotonic structure of ϵ.
2. If $\mathcal{S} = (\underline{O}, \overline{\epsilon}^{(*)}, \underline{r}, .ec)$ is a monotonic structure of ϵ then $\mathcal{S}' = (\underline{O}, \epsilon, \overline{\epsilon}^{(*)}, \underline{r}, .ec, .\varepsilon\varsigma)$, where $(\epsilon) = (\overline{\epsilon})$ and $(.\varepsilon\varsigma) = \emptyset$, is a basic structure.
3. Corollary: There is a one-to-one correspondence between
   - monotonic structures of ϵ and
   - monotonic basic structures – i.e. basic structures in which $(\epsilon) = (\overline{\epsilon})$. (Consequently, $.\varepsilon\varsigma$ is empty.)

Monotonic primary structure

By a *monotonic primary structure* of ϵ we mean a monotonic structure in which every object is primary, i.e. in which the powerclass map $.ec$ is empty. Such a structure can be axiomatized in the signature $(\underline{O}, \epsilon^{(*)}, \underline{r})$ as follows:

(mp~1) The same as (m~1).

(mp~2) (a) $\leq$ is reflexive and antisymmetric and (b) $(\epsilon^{i}) \cap (\ni^{-i}) = \emptyset$ for every $i > 0$.

(mp~3) The same as (m~3).

(mp~4) The same as (m~4).

(mp~5) Terminal objects are minimal in $\leq$.

(mp~6) The same as (m~6).

Observation: There is a one-to-one correspondence between

i. monotonic primary structures and
ii. monotonic basic structures in which $.ec$ is empty.

Membership-based monotonic structure

By a *membership-based monotonic structure* (alternatively, ϵ*-based m. s.*) we mean a monotonic primary structure in which the negative powers of ϵ are given by ϵ and $\leq$. We offer three different prescriptions for ϵ^{-k}, $k > 0$. Recall that $\underline{H} = \underline{r}.\epsilon^{*}$ is the set of *helix* objects.

(mp-α) $x\,\epsilon^{-k}\,y \quad \leftrightarrow \quad x < y.\epsilon^{k}$ and $y.\epsilon^{k} \neq y.\epsilon^{k-1}$,

(mp-β) $x\,\epsilon^{-k}\,y \quad \leftrightarrow \quad x < y.\epsilon^{k}$ and $y.\epsilon^{k} \neq y.\epsilon^{k-1}$ and $y \in \underline{H}$,

(mp-γ) $x\,\epsilon^{-k}\,y \quad \leftrightarrow \quad x < \underline{r}.\epsilon^{k+i}$ and $\underline{r}.\epsilon^{k+i} \neq \underline{r}.\epsilon^{k+i-1}$ and $\underline{r}\,\epsilon^{i}\,y$ for some natural i.

Observations:
Recall that $\underline{h}$ is the helix number defined by $\underline{h} = \sup\{i + 1 \mid \underline{r}.\epsilon^{i} \neq \underline{r}.\epsilon^{i-1}, i \in \mathbb{N}\}$ and that $Y.\vee$ is the set of strict lower bounds of Y.

1. Assume that either of (mp-α)–(mp-γ) is imposed.
   - Condition (mp~2)(b), $(\ni^{-k}) \cap (\epsilon^{k}) = \emptyset$ for every $k > 0$, can be left out since it is implicitly satisfied.
   - If $\underline{h}$ is finite (in particular, if $\underline{H}$ is finite) then $x.mli$ is finite by definition of ϵ^{-k} so that (mp~6) can be left out.
   - Let X be the i-th metalevel for a natural $i > 1$. Then

     $X = \underline{r}.\epsilon^{i-1}.\vee \setminus \underline{r}.\epsilon^{i}.\vee$ if $i < \underline{h}$,
     $X = \underline{H}.\vee$ if $i = \underline{h}$,
     $X = \emptyset$ if $i > \underline{h}$.
2. Prescriptions (mp-β) and (mp-γ) only allow helix objects in the range of ϵ^{-k} for every $k > 0$.

Example

The left diagram below shows an ϵ-based monotonic structure $\mathcal{S}_0 = (\underline{O}_0, \epsilon, \leq_0, \underline{r})$ in which all helix objects (shown in blue) have metalevel index 1. Negative powers of ϵ are given by any of (mp-α)–(mp-γ). Since $b < \underline{r}.\epsilon^{2}$

$= \{\underline{r},u,v\} \neq \{\underline{r},u\} = \underline{r}.\epsilon^1$ and $\underline{r}.\epsilon^3 = \underline{r}.\epsilon^2$ it follows that the metalevel index of b equals 3.

The right diagram shows a monotonic basic structure $\mathcal{S} = (\underline{O}, \epsilon, \ldots)$ that is a powerclass extension of a basic structure definitionally equivalent to $\mathcal{S}$. Negative powers of ϵ in $\mathcal{S}$ are powerclass based, i.e. $(\epsilon^{-i}) = (\leq) \circledcirc .ec(-i)$ for every positive natural i. Extensions of ϵ and $\leq_0$ is to ϵ and $\leq$, respectively, are given by

$a.ec(i) \epsilon b.ec(j)$ iff $a \epsilon^{1+i-j} b$,
$a.ec(i) \leq b.ec(j)$ iff $a \epsilon^{i-j} b$,

where a, b are (primary) objects from $\underline{O}$ and i, j are natural numbers such that $a.ec(i)$ and $b.ec(j)$ are defined (see powerclass completion of basic structures).

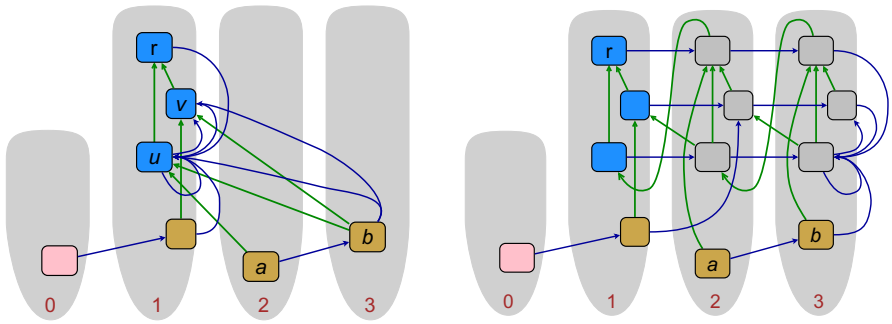

Observations:

1. There can be "gaps" in metalevels. (Consider the left diagram without the a object.)
2. The ϵ^{-2} is not decomposable is $\mathcal{S}_0$ since $b \epsilon^{-2} \underline{r}$ but there is not x such that $b \epsilon^{-1} x \epsilon^{-1} \underline{r}$.

The (mp-γ) prescription

Since the helix number $\underline{h}$ is such that $\underline{r}.\epsilon^i \neq \underline{r}.\epsilon^{j-1} \leftrightarrow j < \underline{h}$ for every natural j, the (mp-γ) prescription can be stated as:

$x \epsilon^{-k} y \quad \leftrightarrow \quad$ there is a natural i such that: $x < \underline{r}.\epsilon^{k+i}$ and $k+i < \underline{h}$ and $\underline{r} \epsilon^i y$.

(mp-γ~1) $\leq$ is a partial order.
(mp-γ~2) $(\epsilon) \circledcirc (\leq) \circledcirc (\epsilon) = (\epsilon)$.
(mp-γ~3) $\underline{O}.\epsilon \leq \underline{r}$.
(mp-γ~4) $\underline{O} = \underline{O}.\ni$.
(mp-γ~5) Objects from $\underline{T}$ are minimal.
(mp-γ~6) If $\underline{h} = \omega$ then $\underline{H}.\triangledown = \emptyset$.
(mp-γ~7) $\underline{r}.\ni^{-k}.\ni \subseteq \underline{r}.\ni^{1-k}$ for every $k > 0$.

The proposition below shows that if (mp-γ) is imposed then (mp~1) and (mp~2) can be equivalently replaced by a conjunction of the following conditions:

- $\leq$ is a partial order,
- $(\epsilon) \circledcirc (\leq) \circledcirc (\epsilon) = (\epsilon)$ (subsumption and monotonicity of ϵ),
- $x.\epsilon.mli \leq x.mli + 1$ for every object x. (The metalevel increment along ϵ it at most 1.)

The resulting axiomatization of structures $(\underline{O}, \epsilon, \leq, \underline{r})$ is shown in the box on the right. (Use the usual definitions of ϵ^i for $i \geq 0$, $\epsilon*$, $\underline{T}$, $\underline{H}$, and $.\triangledown$. For negative powers of ϵ, use the original (mp-γ) prescription and then apply the definition of $\underline{h}$ which refers to $\underline{r}.\epsilon^{-1}$.)

Proposition:
Assume that the prescription (mp-γ) applies.

1. The (m~1) axiom, $(\epsilon^i) \circledcirc (\epsilon^j) \subseteq (\epsilon^{i+j})$ for every integer i, j, is asserted by the following conditions:
   $(\leq) \circledcirc (\leq) \subseteq (\leq)$ (transitivity of $\leq$),
   $(\epsilon) \circledcirc (\leq) \subseteq (\epsilon)$ (subsumption of ϵ),
   $(\leq) \circledcirc (\epsilon) \subseteq (\epsilon)$ (monotonicity of ϵ),
   (⟐) $(\epsilon) \circledcirc (\epsilon^{-i}) \subseteq (\epsilon^{1-i})$ for every positive natural i.
2. The (⟐) condition can be equivalently replaced by any of the following:
   (i) For every object x, $x.\epsilon.mli \leq x.mli + 1$. (That is, $x \epsilon y \rightarrow y.mli \leq x.mli + 1$.)

(ii) For every natural k, $\underline{r}.\ni^{-k}.\ni \subseteq \underline{r}.\ni^{1-k}$. (That is, $x \in y \in^{-k} \underline{r} \rightarrow x \in^{1-k} \underline{r}$.)

Proof:

1. Let k, ℓ be positive natural numbers. We show that

   (a) $(\leq) \circledcirc (\in^{-k}) \subseteq (\in^{-k})$, (b) $(\in^{-k}) \circledcirc (\in) \subseteq (\in^{1-k})$, (c) $(\in^{-k}) \circledcirc (\leq) \subseteq (\in^{-k})$, (d) $(\in^{-k}) \circledcirc (\in^{-\ell}) \subseteq (\in^{-k-\ell})$.

   a. Let x, y, z be such that $x \leq y \in^{-k} z$, i.e. for some natural i such that $i + k < \underline{h}$,
      - $x \leq y < \underline{r}.\in^{i+k}$ and $\underline{r} \in^{i} z$.

      Then $x < \underline{r}.\in^{i+k}$, so that $x \in^{-k} z$.

   b. Let x, y, z be such that $x \in^{-k} y \in z$, i.e. for some natural i such that $i + k < \underline{h}$,
      - $x < \underline{r}.\in^{i+k}$, and $\underline{r} \in^{i} y \in z$.

      Then $(i+1)$ is a natural number such that (α) $\underline{r} \in^{(i+1)} z$, (β) $x < \underline{r}.\in^{(i+1)+(k-1)}$, and (γ) $(i+1) + (k-1) < \underline{h}$. As a consequence, $x \in^{1-k} z$. (For $k = 1$ it follows from (α) and (β) that $x < z$.)

   c. Let x, y, z be such that $x \in^{-k} y \leq z$, i.e. for some natural i such that $i + k < \underline{h}$,
      - $x < \underline{r}.\in^{i+k}$ and $\underline{r} \in^{i} y \leq z$.

      Since $(\in^{i}) \circledcirc (\leq)$ equals $(\in^{i})$, we obtain $\underline{r} \in^{i} z$ so that $x \in^{-k} z$.

   d. Let x, y, z be such that $x \ni^{-k} y \ni^{-\ell} z$, i.e. for some natural i, j such that $i + k < \underline{h}$ and $j + \ell < \underline{h}$,
      - $\underline{r} \in^{i} x$, $\underline{r} \in^{j} y < \underline{r}.\in^{i+k}$, and $z < \underline{r}.\in^{j+\ell}$.

      As a consequence of the underlined condition, $i+k < j$ so that $z < \underline{r}.\in^{i+k+\ell}$.

2. By definition of the metalevel index, $u.mli > i \leftrightarrow u \in^{-i} \underline{r}$ for every natural i, so that for every objects x, y,

   $y.mli \leq x.mli+1 \quad \leftrightarrow \quad$ for every k, if $y \in^{-k} \underline{r}$ then $x \in^{1-k} \underline{r}$.

   This shows (i)↔(ii). Since (⟐)→(ii) trivially it remains to show that (⟐)←(ii). Assume therefore that (ii) is satisfied and let x, y, z be such that $x \in y \in^{-k} z$, i.e. for some natural i such that $i + k < \underline{h}$,
   - $x \in y < \underline{r}.\in^{i+k}$ and $\underline{r} \in^{i} z$.

   Then $y \in^{-i-k} \underline{r}$ so that by (ii) $x \in^{1-i-k} \underline{r}$ and thus $x < \underline{r}.\in^{i+k-1}$ and therefore $x \in^{1-k} z$. □

Structures with a canonical helix

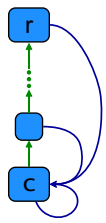

In canonical primary structures [9] the helix structure $(\underline{H}, \in, \leq, \underline{r})$ looks like in the diagram on the right. That is, helix classes are

(a) totally ordered by $\leq$, (b) members of each other, and (c) at least two in number.

As a consequence, $\underline{r}.\in^{0} \neq \underline{r}.\in^{1} = \underline{r}.\in^{2}$ – the helix number $\underline{h}$ equals 2. It follows 2 is the highest possible metalevel index of an object, whenever any of (mp-α)–(mp-γ) is used for the definition of $\in^{-k}$, $k > 0$. Condition (mp-γ~7) about the possible metalevel increment along $\in$ then reduces to

$\underline{T}.\in \cap \underline{H}.\vee = \emptyset$. (That is, members of objects from the 2nd metalevel are non-terminal.)

However, the actual condition used in canonical primary structures reads

$\underline{T}.\in \cap \underline{H}.\triangledown = \emptyset$. (That is, metaclasses cannot have terminal objects as members.)

This is because the least helix class $\underline{c}$, the *metaclass root*, (whose existence is asserted by an additional condition of finiteness of $\underline{C}$) is considered to be extensionally equivalent to $\underline{r}.ec$, the powerclass of $\underline{r}$ in a powerclass extension.

Monotonic eigenclass structure

There are of course no problems with the definition of $\in^{-k}$, $k > 0$ in the case opposite to that of the previous subsection. If $.ec$ is total, then $(\in^{i}) = (\leq) \circledcirc (.ec) \circledcirc (\leq)$ for every integer i. This simplifies the axiomatization.

By a *monotonic eigenclass structure* we mean a structure $\mathcal{S} = (\underline{O}, \leq, \underline{r}, .ec)$ such that

- $\underline{O}$ is a set of *objects*,
- $.ec$ is the *powerclass* / *eigenclass* map $\underline{O} \rightarrow \underline{O}$,
- $\leq$ is the *inheritance* relation between objects,
- $\underline{r}$ is the *inheritance root*, a distinguished object,

and the first 5 axioms of metaobject structures are satisfied:

(e~1) $\leq$ is a partial order.

(e~2) $(\leq) = (.ec) \circledcirc (\leq) \circledcirc (.ce)$, where $.ce$ is the inverse of $.ec$.

(e~3) $(\underline{O} \times \underline{T}.ec^*) \cap (<) = \emptyset$, where $\underline{T} = \underline{O} \setminus \underline{r}.\mathrm{I}$ and $.ec^*$ is the reflexive transitive closure of $.ec$.

(e~4) $\underline{O}.ec \leq \underline{r}$.

(e~5) $\underline{r}.ec^*.\triangledown = \emptyset$. (The set $\underline{r}.ec^*$ has no lower bounds w.r.t. $\leq$.)

Proposition: There is a one-to-one correspondence between

- monotonic eigenclass structures and
- monotonic basic structures that are powerclass complete.

Powerclass-based structures

Another family of basic structures which we consider as distinguished is that which has no primary singletons (and thus $\underline{T}.ec.ec^*$ are the only singletons) and in which power membership and anti-membership are based on $.ec$:

$(\overline{\epsilon}) = (\leq) \circledcirc (.ec) \circledcirc (\leq) \cup (\epsilon) \cap (\underline{T} \times \underline{O})$,

$(\epsilon^{-1}) = (\leq) \circledcirc (.ce) \circledcirc (\leq)$ and for $i > 1$, (ϵ^{i}) is the i-th relational composition of ϵ^{-1} with itself.

Powerclass-based structure

By a *powerclass-based structure* (of ϵ) we mean a structure $(\underline{O}, \epsilon, \leq, \underline{r}, .ec)$ where

- $\underline{O}$ is a set of *objects*,
- ϵ is the *membership* relation between objects,
- $\leq$ is the *inheritance* relation between objects, (with $.\mathrm{I}$ / $.\mathrm{I}$ used for preimages / images under $\leq$),
- $\underline{r}$ is the *inheritance root*, a distinguished object,
- $.ec$ is the *powerclass map*, a partial map between objects.

Let $.ec^*$ be the reflexive transitive closure of $.ec$, let $.ce$ be the inverse of $.ec$. Let $\underline{T} = \underline{O} \setminus \underline{O}.\epsilon.\mathrm{I}$ be the set of *terminal* objects.

The structure is subject to the following axioms. The definitions of $.mli$, $.d$ and $\overline{\epsilon}$ used in the last two axioms are provided subsequently.

(pb~1) $\leq$ is a partial order.

(pb~2) $(\epsilon) \circledcirc (\leq) \subseteq (\epsilon)$.

(pb~3) (a) $(\epsilon) \circledcirc (.ce) \subseteq (\leq)$, (b) $(\leq) \circledcirc (.ec) \subseteq (\epsilon)$, (c) $(.ce) \circledcirc (\leq) \circledcirc (.ec) \subseteq (\leq)$.

(pb~4) The inheritance root $\underline{r}$ is the top of $\underline{O}.\epsilon$, w.r.t. $\leq$.

(pb~5) Every object has a container, $\underline{O} = \underline{O}.\ni$.

(pb~6) Objects from $\underline{T}.ec^*$ are minimal in $\leq$.

(pb~7) For every object x, the metalevel index $x.mli$ is finite.

(pb~8) For every object x, $x.d = \underline{\varpi} \rightarrow x.\epsilon = x.\overline{\epsilon}$.

The *power membership*, $\overline{\epsilon}$, and its -1-st power, $\overline{\epsilon}^{-1}$, are relations between objects defined by

$(\overline{\epsilon}) = (\leq) \circledcirc (.ec) \circledcirc (\leq) \cup (\epsilon) \cap (\underline{T} \times \underline{O})$,

$(\overline{\epsilon}^{-1}) = (\leq) \circledcirc (.ce) \circledcirc (\leq)$.

Subsequently, for every integer i, the i-th power of $\overline{\epsilon}$ is defined as follows.

For $i > 0$, $\overline{\epsilon}^{i}$ equals the i-th relational composition of $\overline{\epsilon}$ with itself.

$\overline{\epsilon}^{0}$ equals $\leq$.

For $i < 0$, $\overline{\epsilon}^{i}$ equals the $-i$-th relational composition of $\overline{\epsilon}^{-1}$ with itself.

Let ϵ^{i}, for an integer i, be i-th power of ϵ, defined to be equal to the i-th relational composition of ϵ with itself if $i > 0$ and equal to $\overline{\epsilon}^{i}$ for $i \leq 0$. The *metalevel index* and *rank* functions $.mli$ and $x.d$ are defined like in metaobject structures:

$x.mli = sup\ \{ i \mid x\, \epsilon^{1-i}\, \underline{r},\ i \in \mathbb{N} \}$,

$x.d = \underline{\varpi}$ if x is non-well-founded in ϵ,

$x.d = \underline{\varpi} \wedge (sup\ \{a.d + 1 \mid a\, \epsilon\, x\} \vee sup\ \{a.mli + i-j \mid a \in x.\ni^{i}.\ni^{-j},\ i,j \in \mathbb{N}\})$ if x is well-founded in ϵ.

Observations:

1. $\underline{r}.ec$ must be defined.
2. $\underline{r}.ec.ec$ can be undefined. Moreover, $\underline{O} = \{\underline{r}, \underline{r}.ec\}$ in the minimum powerclass-based structure.
3. If (pb~5) is replaced by $\underline{T} \subset \underline{O}.ce$ (every terminal has a powerclass) then we obtain more "pure" definition since we could simply define

   $(\overline{\epsilon}) = (\leq) \circledcirc (.ec) \circledcirc (\leq)$.

Proof:

1. Since $\underline{r} \epsilon \underline{r}$ (by the same arguments as for basic structures) it follows by (pb~8) that $\underline{r}.\epsilon = \underline{r}.\overline{\epsilon}$. Since $\underline{r}.\uparrow = \{\underline{r}\}$ it follows that $\underline{r}.\uparrow.ec.\uparrow = \{\underline{r}\}.ec.\uparrow$. Since $\underline{r}.\uparrow.ec.\uparrow = \underline{r}.\overline{\epsilon}$ and this set is non-empty (by $\underline{r}\ \overline{\epsilon}\ \underline{r}$) it follows that $\{\underline{r}\}.ec$ is non-empty. □

The correspondence

Proposition: There is the following one-to-one (definitional) correspondence between powerclass-based structures and basic structures $(\underline{O}, \epsilon, \overline{\epsilon}^{(*)}, \underline{r}, .ec, .\varepsilon\wp)$ in which

$(\overline{\epsilon}) = (\leq) \circledcirc (.ec) \circledcirc (\leq) \ \cup\ (\epsilon) \cap (\underline{T} \times \underline{O})$,

(∗) $(\overline{\epsilon}^{-i}) = ((\leq) \circledcirc (.ce) \circledcirc (\leq))^{i}$ for every natural $i > 0$ in the usual sense of relational composition, and

$(.\varepsilon\wp) = \emptyset$.

I. If $\mathcal{S} = (\underline{O}, \epsilon, \leq, \underline{r}, .ec)$ is a powerclass-based structure then the ϵ5-structure $\mathcal{S}' = (\underline{O}, \epsilon, \ldots)$ derived from $\mathcal{S}$ by the above prescription (∗) (with $(\overline{\epsilon}^{0}) = (\leq)$) is a basic structure.

II. If $\mathcal{S} = (\underline{O}, \epsilon, \ldots)$ is basic structure satisfying (∗) then $\mathcal{S}' = (\underline{O}, \epsilon, \leq, \underline{r}, .ec)$ is a powerclass-based structure.

Proof:

I. Proceed similarly to the case of metaobject structures. (b~2) and (b~3) are shown by the following inclusions:

$$\begin{aligned}
(\overline{\epsilon}^{-1}) \circledcirc (\overline{\epsilon}) &= (\leq) \circledcirc (.ce) \circledcirc (\leq) \circledcirc (\leq) \circledcirc (.ec) \circledcirc (\leq) \\
&= (\leq) \circledcirc ((.ce) \circledcirc (\leq) \circledcirc (.ec)) \circledcirc (\leq) \\
&\subseteq (\leq) \circledcirc (\leq) \circledcirc (\leq) \quad \text{(since } (.ce) \circledcirc (\leq) \circledcirc (.ec) \subseteq (\leq) \text{ by (pb~2)(c))} \\
&= (\leq).
\end{aligned}$$

$$\begin{aligned}
(\overline{\epsilon}) &= (\leq) \circledcirc (.ec) \circledcirc (\leq) \\
&\subseteq (\epsilon) \circledcirc (\leq) \quad \text{(since } (\leq) \circledcirc (.ec) \subseteq (\epsilon) \text{ by (pb~2)(b))} \\
&\subseteq (\epsilon) \quad \text{(by subsumption).}
\end{aligned}$$

$$\begin{aligned}
(\epsilon) \circledcirc (\overline{\epsilon}^{-1}) &= (\epsilon) \circledcirc (\leq) \circledcirc (.ce) \circledcirc (\leq) \\
&\subseteq (\epsilon) \circledcirc (.ce) \circledcirc (\leq) \quad \text{(by subsumption)} \\
&\subseteq (\leq) \circledcirc (\leq) \quad \text{(since } (\epsilon) \circledcirc (.ce) \subseteq (\leq) \text{ by (pb~2)(a))} \\
&= (\leq).
\end{aligned}$$

$$\begin{aligned}
(\overline{\epsilon}) \circledcirc (\overline{\epsilon}^{-1}) &\subseteq (\epsilon) \circledcirc (\overline{\epsilon}^{-1}) \quad \text{(since } (\overline{\epsilon}) \subseteq (\epsilon)\text{)} \\
&\subseteq (\leq).
\end{aligned}$$

□

Powertype-based structure

The following definition provides an "intermediate" family of structures between basic structures and *abstract power type systems* introduced in the specialized document [12].

By a *powertype-based structure* (of ϵ) we mean a structure $(\underline{O}, \epsilon, .ec, \underline{r})$ where

- $\underline{O}$ is a set of *objects*,
- $.\epsilon$ is the *membership* relation between objects,
- $.ec$ is the *powerclass map*, a partial map between objects,
- $\underline{r}$ is the *inheritance root*, a distinguished object.

Let $.ec^{*}$ be the reflexive transitive closure of $.ec$, let $.ce$ be the inverse of $.ec$. Let $\leq$ be the *inheritance* relation between objects defined by

- $u \leq x$ iff $u = x$ or $u \epsilon x.ec$.

The structure is subject to the following axioms. (The definition of $.d$ is again postponed.)

(ptb~1) $\underline{O}.ce = \underline{r}.{\downarrow}$.   (The powerclass map $.ec$ is defined exactly for descendants of $\underline{r}$.)

(ptb~2) $\underline{O}.\epsilon \leq \underline{r}$.   (Every container is a descendant of $\underline{r}$.)

(ptb~3) $\underline{O} = \underline{O}.\ni$.   (Every object has a container.)

(ptb~4) $(.ec) \subseteq (\epsilon)$.   ("Powerclass-of" is a special case of "container-of".)

(ptb~5) $(\epsilon) \odot (\leq) \subseteq (\epsilon)$.   (The subsumption rule.)

(ptb~6) $(.ce) \odot (\leq) \odot (.ec) \subseteq (\leq)$.   (Monotonicity of $.ec$.)

(ptb~7) $(<) \cap (>) = \varnothing$.   (Antisymmetry of $\leq$.)

(ptb~8) $\underline{r}.ec{*}.\triangledown = \varnothing$.   (Every object has a finite metalevel index.)

(ptb~9) For every object x, $x.d = \underline{\varpi} \;\; \rightarrow \;\; x.\epsilon = x.ec.{\uparrow}$.

The definitions of $\overline{\epsilon}$, $\overline{\epsilon}^{i}$, ϵ^{i} ($i \in \mathbb{Z}$), $.mli$, and $.d$ are identical to those introduced for powerclass-based structures.

Observations:

1. (Definitional correspondence.) For a structure $\mathcal{S} = (\underline{O}, \epsilon, \leq, \underline{r}, .ec)$ the following are equivalent:
   1. $\mathcal{S}$ is a definitional extension of a powertype-based structure.
   2. $\mathcal{S}$ is a powerclass-based structure such that $\underline{O}.ce = \underline{r}.{\downarrow}$.
2. (Powerclass completion correspondence.) There is a one-to-one correspondence between
   1. powertype-based structures, and
   2. basic structures that (a) are powerclass complete ($\underline{O} = \underline{O}.ce$) and (b) have no primary singletons ($(.\varepsilon ɕ) = \varnothing$). ☐

Extensions

Let $\mathcal{S} = (\underline{O}, \epsilon, \overline{\epsilon}^{(*)}, \underline{r}, .ec, .\varepsilon ɕ)$ and $\mathcal{S}_0 = (\underline{O}_0, \ldots)$ be $\epsilon5$-structures. We say that

$\mathcal{S}$ is an *extension* of $\mathcal{S}_0$ if $\mathcal{S}_0$ is a restriction of $\mathcal{S}$ (see below for the precise meaning),
$\mathcal{S}$ is a *powerclass extension* of $\mathcal{S}_0$ if $\mathcal{S}_0$ is a restriction of $\mathcal{S}$ with the same set of primary objects,
$\mathcal{S}$ is a *primary extension* of $\mathcal{S}_0$ if $\mathcal{S}_0$ is a restriction of $\mathcal{S}$ with the same set of powerclasses.

If $\mathcal{S}$ is an extension of $\mathcal{S}_0$ then the following notation and terminology apply. We call objects from $\underline{O}_0$ *old* and objects from $\underline{O} \setminus \underline{O}_0$ *new*. We will use the subscript to distinguish between symbols for $\mathcal{S}_0$ and $\mathcal{S}$, as has already been applied for $\underline{O}$. In particular, $.ec_0$ and $.\varepsilon ɕ_0$ are the powerclass and primary singleton maps in $\mathcal{S}_0$, respectively, $\underline{T}_0$ is the set of terminal objects in $\mathcal{S}_0$. Similarly with other symbols that are used to denote either a set of objects, or a (partial) map on objects, e.g. $.pr_0$, $.mli_0$ or $.d_0$.

For "ϵ" and similar symbols, we use a special ("ligature") marker: $\scriptstyle\square$, so that $\epsilon_{\square}$ / $\overline{\epsilon}_{\square}$ / $\epsilon_{\square}$ denote the membership / power membership / bounded membership in $\mathcal{S}_0$. Similarly with $\epsilon_{\square}^{i}$ / $\overline{\epsilon}_{\square}^{i}$ / $\epsilon_{\square}^{i}$ for an integer i.

We can therefore express $\mathcal{S}_0 = (\underline{O}_0, \epsilon_{\square}, \overline{\epsilon}_{\square}^{(*)}, \underline{r}, .ec_0, .\varepsilon ɕ_0)$. An $\epsilon5$-structure $\mathcal{S} = (\underline{O}, \epsilon, \ldots)$ is an extension of $\mathcal{S}_0$ iff

- $\underline{O}_0 \subseteq \underline{O}$,
- the inheritance roots in $\mathcal{S}$ and $\mathcal{S}_0$ are coincident,
- for every old objects x, y and every integer $i \leq 1$,
  - $x \epsilon_{\square} y \leftrightarrow x \epsilon y$, $x \overline{\epsilon}_{\square}^{i} y \leftrightarrow x \overline{\epsilon}^{i} y$, $x.ec_0 = y \leftrightarrow x.ec = y$, $x.\varepsilon ɕ_0 = y \leftrightarrow x.\varepsilon ɕ = y$.

$\mathcal{S}$ is a powerclass (resp. primary) extension of $\mathcal{S}_0$ iff $\underline{O}_0.pr_0 = \underline{O}.pr$ (resp. $\underline{O}_0.ec_0 = \underline{O}.ec$).

Faithful extension

Let $\mathcal{S} = (\underline{O}, \epsilon, \ldots)$ and $\mathcal{S}_0 = (\underline{O}_0, \epsilon_{\square}, \ldots)$ be $\epsilon5$-structures. We say that $\mathcal{S}$ is a *faithful extension* of $\mathcal{S}_0$ if $\mathcal{S}$ is an extension of $\mathcal{S}_0$ and the following additional conditions are satisfied:

(A) For every old object x, $\{x\}.pr = \{x\}.pr_0$.   (That is, $\underline{O}_0.pr_0 \subseteq \underline{O}.pr$.)

(B) For every natural i, $\epsilon_{\square}^{i}$ equals the restriction of ϵ^{i} to the set $\underline{O}_0$ of old objects.

(C) For every natural i, $\overline{\epsilon}^i$ equals the restriction of $\overline{\epsilon}^i$ to the set $\underline{O}_0$ of old objects.

(D) For every old object x, $x.d = x.d_0$.

Observe that for powerclass extensions as well as for primary extensions, (A) is satisfied implicitly.

Embedding

For $\epsilon 5$-structures, $\mathcal{S}_1 = (\underline{O}_1, \epsilon, \ldots)$ and $\mathcal{S}_2 = (\underline{O}_2, \epsilon, \ldots)$ a map $.v$ from $\underline{O}_1$ to $\underline{O}_2$ is an *embedding* of $\mathcal{S}_1$ into $\mathcal{S}_2$ if it is an isomorphism between $\mathcal{S}_1$ and the restriction of $\mathcal{S}_2$ to $\underline{O}_1.v$, that is,

- $\underline{r}_1.v = \underline{r}_2$ and for every objects x, y from $\underline{O}_1$ and every integer $i \le 1$,
  - $x \epsilon y \leftrightarrow x.v \epsilon y.v$, $x \overline{\epsilon}^i y \leftrightarrow x.v \overline{\epsilon}^i y.v$, $x.\epsilon c = y \leftrightarrow x.v.\epsilon c = y.v$, $x.\epsilon\mathfrak{c} = y \leftrightarrow x.v.\epsilon\mathfrak{c} = y.v$.

If $\mathcal{S}_1.v$ denotes the restriction of $\mathcal{S}_2$ to $\underline{O}_1.v$ then $\mathcal{S}_2$ is an extension of $\mathcal{S}_1.v$. If this extension is faithful then $.v$ is said to be faithful.

Summary of provided extensions

	Extension name	Provided for	Preserved (P) / Extended (E)		
			$.\epsilon c$	$.\epsilon\mathfrak{c}$	$\underline{O}.pr$
1	Ranking product	Pre-basic structure	P	P	E
2	Powerclass completion	Basic structure	E	P	P
3	Primary singleton completion	Basic structure	P	E	P
4	Singleton completion (3∘2')	Basic structure	E	E	P
5	Extensional pre-completion	Metaobject complete b.s.	E	E	P
6	Rank pre-completion	Basic structure	P	P	E
7	Pre-completion (6∘2∘3∘2∘5)	Basic structure	E	E	E
8	Completion of a	Pre-complete structure	E	E	E
9	Completion (7∘8)	Basic structure	E	E	E

Notes:

1. Except for the ranking product, every listed extension is a "completion" in the sense of idempotency of the extension.
2. Extensions 2,3,4 and 8 are true completions in the sense of *least* extension. If $\mathcal{S}_0$ is a basic structure (resp. pre-complete structure in the case 8), and $\mathcal{S}$ is the respective extension of $\mathcal{S}_0$ then $\mathcal{S}$ is the least extension of $\mathcal{S}_0$ that is a basic structure that is

   (2) powerclass complete ($x.\epsilon c$ is defined for every $x \in \underline{O}$),
   (3) primary singleton complete ($x.\epsilon\mathfrak{c}$ is defined for every $x \in \underline{O}.\ni \setminus (\underline{T} \cup \underline{O}.\epsilon c)$),
   (4) singleton complete ($x.\epsilon c$ is defined for every $x \in \underline{O}.\ni$),
   (8) complete ($\mathcal{S}$ is an $(\underline{\omega}+1)$-superstructure).

Ranking product

This section describes embedding of a pre-basic structure $\mathcal{S}$ into an ϵ-ranked pre-basic structure $\mathcal{S}'$ called the *ranking product* of $\mathcal{S}$. Such an embedding allows to express the rank function $.d$ in $\mathcal{S}$ via the (simpler) ϵ-rank function $r_\epsilon()$ in $\mathcal{S}'$. The set $\underline{O}'$ of objects of $\mathcal{S}'$ consists of "indexed objects" – pairs $(x,-i)$ where

- x is an object of $\mathcal{S}$ and,
- i is a natural number less than or equal to the metalevel index of x.
  (We also impose the $i = 0$ condition whenever x is a powerclass. This simplifies the diagrams of $\mathcal{S}'$.)

Embedded objects are then those indexed by 0. The desired embedding of the rank function is expressed by

$x.d = r_\epsilon(x,0) = (x,0).d$ for every object x of $\mathcal{S}$.

Example

The diagram on the right shows the ranking product $\mathcal{S}' = (\underline{O}\rceil, \ldots)$ of a basic structure $\mathcal{S} = (\underline{O}, \ldots)$. Negatively indexed objects are displayed in khaki color. The "original" structure $\mathcal{S}$ can be identified with the restriction of $\mathcal{S}'$ to zero-indexed objects.

Observations:

1. $\mathcal{S}'$ is a basic structure of ϵ.
2. For every $(x,-i)$ from $\underline{O}\rceil$, the metalevel index of $(x,-i)$ equals $x.mli - i$.

Informally, each primary object is equipped with an ϵ-chain to reach the 0-th metalevel. (The old objects have zero index, the new objects are those with a negative index.)

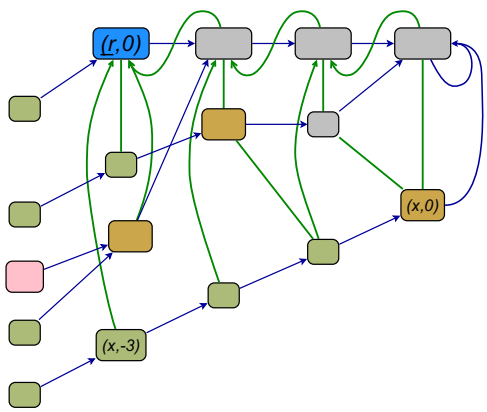

Ranking product

For an $\epsilon 5$-structure $\mathcal{S} = (\underline{O}, \epsilon, \overline{\epsilon}^{(*)}, \underline{r}, .ec, .\varepsilon\!\!\!\varepsilon)$ the *ranking product* of $\mathcal{S}$ is an $\epsilon 5$-structure $\mathcal{S}' = (\underline{O}\rceil, \epsilon, \overline{\epsilon}^{(*)}, \dot{\underline{r}}, .ec, .\varepsilon\!\!\!\varepsilon)$ defined as follows.

- $\underline{O}\rceil$ is the subset of $\underline{O} \times \mathbb{Z}$ such that for every object x and every integer i,

  $(x,i) \in \underline{O}\rceil \quad \leftrightarrow \quad -x.mli \le i \le 0$ and x is primary $(*)$

  or $i = 0$ (and x is an arbitrary object).

- For every (x,i), (y,j) from $\underline{O}\rceil$ and every integer $k \le 1$,

  $(x,i)\ \epsilon\ (y,j) \quad \leftrightarrow$ (a) $(x,i+1) = (y,j)$ and $j < 0$, or (b) $x\ \overline{\epsilon}^{1+i}\ y$ and $j = 0$, or (c) $x\ \epsilon\ y$ and $i = j = 0$,

  $(x,i)\ \overline{\epsilon}^{k}\ (y,j) \quad \leftrightarrow$ (a) $(x,i+k) = (y,j)$ and $i \le j < 0$, or (b) $x\ \overline{\epsilon}^{k+i}\ y$ and $j = 0$,

  $\dot{\underline{r}} = (\underline{r}, 0)$,

  $(x,i).ec = (y,j) \quad \leftrightarrow \quad x.ec = y$ and $i = j = 0$,

  $(x,i).\varepsilon\!\!\!\varepsilon = (y,j) \quad \leftrightarrow \quad x.\varepsilon\!\!\!\varepsilon = y$ and $i = j = 0$.

Notes:

1. If $x.mli = \omega$ then $-x.mli \le i$ is understood as a void condition.
2. Assuming reflexivity of $\le$ in $\mathcal{S}$, the grayed condition $j < 0$ can be left out.
3. $(*)$ Since there is no constraint for primary singletons x, the definition does not preserve basic structures – if $\mathcal{S}$ is a basic structure in which $.\varepsilon\!\!\!\varepsilon$ is non-empty then $\mathcal{S}'$ is not a basic structure. This can be presumably resolved by disallowing pairs (x,i) with $i \ne 0$ for primary objects x such that
   - $\{u\} = x.\ni$ for some u from $x.\epsilon^{-1}$ and $x.\overline{\ni}^{-k} = \{x\}.ec(k)$ for every natural k.

   However, we only need embedding of pre-basic structures so that we avoid such a complication.

Observations:

1. For every $(x,-i)$ from $\underline{O}\rceil$ such that $i \ne 0$ the following is satisfied:
   a. $(x,-i).\ni$ equals either $\{(x,-i-1)\}$ or $\emptyset$ (the latter case occurs iff $x.mli = i$).
   b. $(x,-i)$ is well-founded in $(\underline{O}\rceil, \epsilon) \quad \leftrightarrow \quad x.mli$ is finite.
   c. If $x.mli$ is finite then the ϵ-rank of $(x,-i)$ equals $x.mli - i$.

Assume $(\overline{\epsilon}) \subseteq (\epsilon)$ in $\mathcal{S}$.

2. The map $x \mapsto (x,0)$ is an embedding of $\mathcal{S}$ into $\mathcal{S}'$.

Embedding of pre-basic structures

Proposition: Let $\mathcal{S}'$ be the ranking product of a pre-basic structure $\mathcal{S}$ and denote $.v$ the map $x \mapsto (x,0)$ from $\underline{O}$ to $\underline{O}\rceil$. Then

A. $\mathcal{S}'$ is a pre-basic structure,
B. $\mathcal{S}'$ is ϵ-ranked,

C. $.v$ is a faithful embedding of $\mathcal{S}$ into $\mathcal{S}'$.

As a particular consequence of (B) and (C), for every object x from $\underline{O}$, $x.d = r_\epsilon(x,0) = (x,0).d$.

Proof:

The proof is divided into (proofs of) claims below.

Claim A: $\mathcal{S}'$ satisfies the axioms of pre-basic structures:

1. (ϐ~1) is satisfied: $(\overline{\epsilon}) \subseteq (\epsilon)$ in $\mathcal{S}'$.
2. (ϐ~2)–(ϐ~4) are satisfied.
3. For every $(x,-i)$ from $\underline{O}$, $(x,-i) \le \dot{r} \leftrightarrow i < x.mli$. Corollary:
   - The set $\dot{\underline{T}}$ of terminals of $\mathcal{S}'$ consists of pairs $(x,-i)$ such that $x.mli = i$.
   - $\underline{T}.v \subseteq \dot{\underline{T}}$.
   - (ϐ~5) is satisfied: $\underline{O}.\epsilon \le \dot{r}$.
4. (ϐ~6) is satisfied: $\underline{O}.\ni = \underline{O}$.
5. (ϐ~7) is satisfied: For every natural k, $\dot{\underline{T}}.\ni^{-k} \cap \dot{r}.\ni^{-k} = \varnothing$.

Proof:

1. This follows directly from the prescription for ϵ and $\overline{\epsilon}^1$ in $\mathcal{S}'$.
2. Assume that for every natural $k > 1$, the $\overline{\epsilon}^k$ relation in $\mathcal{S}'$ is defined the same way as for $k \le 1$. It is then sufficient to prove that for every $\dot{x}$, $\dot{y}$, $\dot{z}$ from $\underline{O}$, and for every integers m, n and natural k the following is satisfied:
   - (b~0): $k > 1$ and $\dot{x}\,\overline{\epsilon}^k\,\dot{y} \quad\rightarrow\quad \dot{x}\,\overline{\epsilon}^p\,\dot{s}\,\overline{\epsilon}^q\,\dot{y}$ for some $\dot{s} \in \underline{O}$ and natural $p, q > 0$ such that $p + q = k$.
   - (b~2): $\dot{x}\,\overline{\epsilon}^m\,\dot{y}\,\overline{\epsilon}^n\,\dot{z} \quad\rightarrow\quad \dot{x}\,\overline{\epsilon}^{m+n}\,\dot{z}$.
   - (b~3): $\dot{x}\,\epsilon\,\dot{y}\,\epsilon^{-k}\,\dot{z} \quad\rightarrow\quad \dot{x}\,\epsilon^{1-k}\,\dot{z}$.
   - (b~4): $\dot{x}\,\overline{\epsilon}^m\,\dot{y}\,\overline{\ni}^{-m}\,\dot{x} \quad\leftrightarrow\quad \dot{x}.ec(m) = \dot{y}$.

   To prove (b~0), let $\dot{x} = (x,i)\,\overline{\epsilon}^k\,(y,j) = \dot{y}$. Then the requested $\dot{s}$ and p, q are obtained according to the following:
   - If $k+i > 0$ then $(x,i)\,\overline{\epsilon}^{-i}\,\dot{s}\,\overline{\epsilon}^{k+i}\,(y,0)$ where $\dot{s} = (x,0)$.
   - If $k+i \le 0$ then $(x,i)\,\overline{\epsilon}^{k-1}\,\dot{s}\,\overline{\epsilon}\,(y,j)$ where $\dot{s} = (x,i+k-1)$.

   To prove (b~2), assume $(x,i)\,\overline{\epsilon}^m\,(y,j)\,\overline{\epsilon}^n\,(z,\ell)$. Then $(x,i)\,\overline{\epsilon}^{m+n}\,(z,\ell)$ is a consequence of the following:
   - If $\ell < 0$ then $i \le j < \ell$ and $(x,i+m) = (y,j) = (z,\ell-n)$.
   - If $j < \ell = 0$ then $(x,i+m) = (y,j)$ and $y\,\overline{\epsilon}^{n+j}\,z$ and thus $x\,\overline{\epsilon}^{m+n+i}\,z$.
   - If $j = \ell = 0$ then $x\,\overline{\epsilon}^{m+i}\,y\,\overline{\epsilon}^n\,z$ and thus $x\,\overline{\epsilon}^{m+n+i}\,z$.

   To prove (b~3), assume $(x,i)\,\epsilon\,(y,j)\,\epsilon^{-k}\,(z,\ell)$. If $(x,i)\,\overline{\epsilon}\,(y,j)$ then (b~2) applies. We can therefore assume further that $((x,i),(y,j)) \notin (\underline{O}, \overline{\epsilon})$ so that condition (c) in the definition of $(\underline{O}, \epsilon)$ is satisfied: $x\,\epsilon\,y$ and $i = j = 0$. Consequently, $\ell = 0$, so that $(x,0)\,\epsilon^{1-k}\,(z,0)$ follows by the embedding of ϵ and its powers.

   To prove (b~4), assume $(x,i)\,\overline{\epsilon}^m\,(y,j)\,\overline{\epsilon}^{-m}\,(x,i)$.
   - If $i < 0$ or $j < 0$ then (by definition of $(\underline{O}, \overline{\epsilon}^{(*)})$) $(x,i) = (y,j)$ and $m = 0$.
   - Otherwise (i.e. if $i = j = 0$), $x\,\overline{\epsilon}^m\,y\,\overline{\epsilon}^{-m}\,x$ and thus (by (b~4) in $\mathcal{S}$) $x.ec(m) = y$. It follows by the definition of $(\underline{O}, .ec)$ that $(x,i).ec(m) = (y,j)$.

   This shows the "→" direction in the (b~4) equivalence. The reverse direction is verified similarly.
3. This is a consequence of: $(x,-i) \le (\underline{r},0) \leftrightarrow x\,\overline{\epsilon}^{-i}\,\underline{r} \leftrightarrow i < x.mli$.
4. This is a consequence of: $(x,-i)\,\overline{\epsilon}\,(\underline{r},0) \leftrightarrow x\,\overline{\epsilon}^{1-i}\,\underline{r} \leftrightarrow i \le x.mli$.
5. Let (y,j) be from $\dot{\underline{T}}$ and k a natural number. We should show that

   $(*)$ $(y,j).\ni^{-k} \cap (\underline{r},0).\ni^{-k} = \varnothing$.

   If $j \ne 0$ then $(y.j).\ni^{-k} \ne \varnothing \leftrightarrow k = 0$ so that $(*)$ follows by $\dot{\underline{T}} \cap \dot{r}.\mathrm{I} = \varnothing$. If $j = 0$ then y is terminal so that for every $(x,-i)$ from $\underline{O}$,
   - $(x,-i)\,\overline{\epsilon}^{-k}\,(\underline{r},0) \leftrightarrow x\,\overline{\epsilon}^{-i-k}\,\underline{r}$,
   - $(x,-i)\,\overline{\epsilon}^{-k}\,(y,0) \leftrightarrow x\,\overline{\epsilon}^{-i-k}\,y$.

   Since by (ϐ~7) in $\mathcal{S}$ there is no object x such that $x\,\overline{\epsilon}^{-i-k}\,\underline{r}$ and $x\,\overline{\epsilon}^{-i-k}\,y$, the equality $(*)$ follows. □

Claim B:

1. For every $(x,-i)$ from $\underline{O}$,
   a. $i + (x,-i).mli = x.mli$. In particular, $(x,-i).mli < \omega \leftrightarrow x.mli < \omega$.
   b. (x,i) is primary $\quad\leftrightarrow\quad$ x is primary.

2. $\mathcal{S}'$ is ϵ-ranked.

Proof:

1. (a) follows by the equivalence $(x,-i)\ \overline{\epsilon}^{-k}\ (\underline{r},0) \leftrightarrow x\ \overline{\epsilon}^{-i-k}\ \underline{r}$. (b) follows by definition of $(\underline{O}\rceil, .ec)$.
2. By groundedness in pre-basic structures, $\mathcal{S}'$ is ϵ-ranked iff

   $(*)$ For every $\dot{x}$ that is well-founded in $(\underline{O}\rceil, \epsilon)$, (a) $\dot{x}.mli < \omega$, and (b) $\dot{x} \in \underline{\dot{T}}.\epsilon^*$.

   Assume that $(x,-i)$ is from $\underline{O}\rceil$ and x is primary. Then by definition of $(\underline{O}\rceil, \epsilon)$,

   - $x.mli = \omega \quad \rightarrow \quad (x,-i)$ is non-well-founded in $(\underline{O}\rceil, \epsilon)$,
   - $x.mli < \omega \quad \rightarrow \quad (x,-i) \in \underline{\dot{T}}.\epsilon^*$ (since $\underline{\dot{T}} \ni (x,-m)\ \epsilon^{m-i}\ (x,i)$ where $m = x.mli$).

   This shows that $(*)$ holds for all primary $\dot{x}$. Finally, assume that $\dot{x}$ is well-founded in $(\underline{O}\rceil, \epsilon)$ and not primary. Then

   - $\dot{x}.pr$ exists and is well-founded (according to observations about $.ec$), therefore
   - $\dot{x}.pr.mli < \omega$ and $\dot{x}.pr \in \underline{\dot{T}}.\epsilon^*$ (since $(*)$ applies to $\dot{x}.pr$), therefore
   - $\dot{x}.mli < \omega$ and $\dot{x} \in \underline{\dot{T}}.\epsilon^*$ (since $\dot{x}.pr.mli < \omega \leftrightarrow \dot{x}.mli < \omega$ and $\dot{x}.pr.\epsilon^* \ni \dot{x}$). □

Claim C:

1. For every object x from $\underline{O}$ the following are equivalent:
   i. (a) x is well-founded in ϵ and (b) for every a from $x.\ni^*.\ni^{-*}$, the metalevel index $a.mli$ is finite.
   ii. $(x,0)$ is well-founded in $(\underline{O}\rceil, \epsilon)$.
2. The ranking product $\mathcal{S}'$ preserves the rank: For every object x from $\underline{O}$, $(x,0).d = x.d$.
3. $\mathcal{S}$ is a faithfully embedded in $\mathcal{S}'$.

Proof:

1. The ¬(i)→¬(ii) implication follows by the $x \mapsto (x,0)$ embedding. To show ¬(i)←¬(ii), assume that x is an object such that $a.mli$ is finite for every a from $x.\ni^*.\ni^{-*}$ and $(x,0)$ is non-well-founded in $(\underline{O}\rceil, \epsilon)$, i.e. there is an infinite chain

   - $(x,0) = (x_0,i_0) \ \ni\ (x_1,i_1) \ \ni\ (x_2,i_2) \ \ni \cdots$

   in $(\underline{O}\rceil, \epsilon)$. Since $(y,-j).\ni^{y.mli+1} = \emptyset$ for every $(y,-j)$ from $\underline{O}\rceil$ such that $j \neq 0$ and $y.mli$ is finite, it follows that $i_k = 0$ for every natural k. As a consequence, x is non-well-founded in $(\underline{O}, \epsilon)$.
2. Denote W the set of all x from $\underline{O}$ such that (i) from C1 is satisfied, and $\dot{W}$ the set of $\dot{x}$ from $\underline{O}\rceil$ that are well-founded in $(\underline{O}\rceil, \epsilon)$. Define recursively functions $r_1()$ / $r_2()$ on W / $\dot{W}$ by

   $r_1(x) = sup\ \{\ r_1(a) + 1 \mid a \in x\ \} \wedge sup\ \{a.mli + i-j \mid a \in x.\ni^i.\ni^{-j},\ i,j \in \mathbb{N}\}$ (so that $x.d = r_1(x) \wedge \varpi$),

   $r_2(\dot{x}) = sup\ \{\ r_2(\dot{a}) + 1 \mid \dot{a} \in \dot{x}\ \}$ (so that $r_\epsilon(x) = r_2(x) \wedge \varpi$).

   We show that $r_1(x) = r_2(x,0)$ for every x from W so that, consequently, for every object x from $\underline{O}$,

   $x.d = r_\epsilon(x,0) = (x,0).d$ (the latter equality is by B2).

   Let x be from W and let $\dot{x} = (x,0)$. Denote

   $A = \{\ r_1(a) + 1 \mid a \in x\ \}$, $B = \{\ a.mli + i-j \mid a \in x.\ni^i.\ni^{-j},\ i,j \in \mathbb{N}\}$,

   $A' = \{\ r_2(\dot{a}) + 1 \mid \dot{a} \in \dot{x},\ \dot{a} \in \underline{O} \times \{0\}\ \}$, $B' = \{\ r_2(\dot{a}) + 1 \mid \dot{a} \in \dot{x}\ \} \setminus A'$,

   so that $r_1(x) = sup(A \cup B)$ and $r_2(\dot{x}) = sup(A' \cup B')$. It is therefore sufficient to show that $A \cup B = A' \cup B'$. By well-founded recursion, we can assume that $A = A'$.

   To show $B \subseteq A' \cup B'$, let $a\ \epsilon^{-j}\ y\ \epsilon^{i}\ x$ for some natural i, j and denote $m = a.mli$ (so that $m+i-j \in B$). By observations about $.d$, we can assume that a is primary. Since $j \leq a.mli$ it follows that $(a,-j) \in \underline{O}\rceil$. Subsequently,

   - $(a,-m)\ \epsilon^{m-j}\ (a,-j) \leq (y,0)\ \epsilon^{i}\ (x,0)$ and thus $(a,-m)\ \epsilon^{m+i-j}\ (x,0)$ which shows that $m+i-j \in A' \cup B'$.

   To show $B' \subseteq B$, let $\dot{a} = (a,-1-j) \in (x,0)$, $j \in \mathbb{N}$ so that $r_2(\dot{a}) = a.mli -1-j$ and $a\ \epsilon^{-j}\ x$. Subsequently,

   - $r_2(\dot{a}) + 1 = a.mli - j$ and $a \in x.\ni^0.\ni^{-j}$,

   therefore $r_2(\dot{a})+1 \in B$.
3. Embedding of constituents of the signature has already been observed. Embedding of $.pr$ follows by definition of $(\underline{O}\rceil, .ec)$. Embedding of positive powers of ϵ / $\overline{\epsilon}$ follows from the closedness of the set $\underline{O}.v$ of embedded object w.r.t. $.\epsilon^*$. Finally embedding of $.d$ has been proved in C2. □

Rank in pre-basic structures ⊤

The following proposition provides a summary of main properties of the rank function $.d$. Properties (3)–(6) are obtained as consequences of the embedding into the ranking product.

Proposition: In a pre-basic structure $\mathcal{S}$ the following are satisfied.

1. For every object x, $0 \le x.mli \le x.d \le \underline{\varpi}$.
2. For every object x, $x.d = 0 \leftrightarrow x \in \underline{T}$.
3. For every objects x, y, $x \le y \to x.d \le y.d$. (That is, $.d$ is monotone w.r.t. $\le$.)
4. For every objects x, y, $x \in y \to x.d < y.d$.
5. For every object x such that $x.ec$ is defined, $x.ec.d = \underline{\varpi} \wedge (x.d + 1)$, i.e.
   $x.ec.d = x.d + 1$ if $x.d < \underline{\varpi}$,
   $x.ec.d = x.d$ if $x.d = \underline{\varpi}$.
6. If, in addition, (b~7) and (b~8) are satisfied then
   $x.\varepsilon c.d = x.d + 1$ for every object x such that $x.\varepsilon c$ is defined.

Proof: Let $\mathcal{S}' = (\underline{O}, \ldots)$ be the ranking product of $\mathcal{S}$.

3. For every $x,y \in \underline{O}$,
   $x \le y \quad \to \quad (x,0) \le (y,0)$ (by embedding of $\le$)
   $\to \quad (x,0).\ni \subseteq (y,0).\ni$ (by subsumption in $\mathcal{S}'$)
   $\to \quad r_\in(x,0) \le r_\in(y,0)$ (by definition of $r_\in$)
   $\leftrightarrow \quad (x,0).d \le (y,0).d$ (since $\mathcal{S}'$ is $\in$-ranked)
   $\leftrightarrow \quad x.d \le y.d$ (by embedding of $.d$).
4. For every $x,y \in \underline{O}$,
   $x \in y \quad \to \quad (x,0) \in (y,0)$ (by embedding of $\in$)
   $\to \quad r_\in(x,0) < r_\in(y,0)$ (by definition of $r_\in$)
   $\leftrightarrow \quad x.d < y.d$.
5. For every $x,y \in \underline{O}$,
   $x.ec = y \quad \to \quad (x,0).\mathrm{I} = (y,0).\ni$ (by embedding of $.ec$)
   $\to \quad \underline{\varpi} \wedge (r_\in(x,0) + 1) = r_\in(y,0)$ (since $r_\in(u,i) \le r_\in(x,0)$ for every (u,i) from $(x,0).\mathrm{I}$)
   $\leftrightarrow \quad \underline{\varpi} \wedge (x.d + 1) \le y.d$.
6. For every $x,y \in \underline{O}$,
   $x.\varepsilon c = y \quad \to \quad \{(x,0)\} \cup (y,-1).\ni = (y,0).\ni$ (by embedding of $\in$ and the additional assumptions)
   $\to \quad (r_\in(x,0) + 1) \vee (r_\in(y,-1) + 1) = r_\in(y,0)$ (since $r_\in(\dot{y}) \le r_\in(y,-1)$ for every $\dot{y}$ from $(y,-1).\ni$)
   $\to \quad (x.d + 1) \vee y.mli = y.d$ (by definition of $(\underline{O}, \in)$)
   $\to \quad x.d + 1 = y.d$ (since $y.mli \le y.d$).

□

Powerclass completion

In this section we show that every basic structure can be faithfully embedded into a powerclass complete basic structure.

Powerclass completion

Let $\mathcal{S} = (\underline{O}, \in, \ldots)$ be an $\in$5-structure and $\mathcal{S}_0 = (\underline{O}_0, \in_0, \ldots)$ a pre-basic structure. We say that $\mathcal{S}$ is a *powerclass completion* of $\mathcal{S}_0$ if $\mathcal{S}$ is an extension of $\mathcal{S}_0$ that is created in the following steps:

I. Extend $(\underline{O}_0, .ec)$ to $(\underline{O}, .ec)$ so that
   (a) $.ec$ is injective well-founded map on $\underline{O}$, and
   (b) $\underline{O}.pr = \underline{O}_0.pr_0$. (That is, $\mathcal{S}$ is a powerclass extension of $\mathcal{S}_0$ – every new object is a powerclass.)
   There is obviously exactly one such extension, up to isomorphism.
II. Extend $\in_0$ and $\overline{\in}_0^{(*)}$ to $\in$ and $\overline{\in}^{(*)}$ according to the following.
   For every primary objects a, b and every natural i, j such that at least one of $a.ec(i)$ or $b.ec(j)$ is a new

object, the following holds:

(α) $a.ec(i) \in b.ec(j)$ iff $a \overline{\in}^{1+i-j} b$,

(β) $a.ec(i) \overline{\in}^{k} b.ec(j)$ iff $a \overline{\in}^{k+i-j} b$ for every integer k.

Since this definition asserts the existence of a unique, up to isomorphism, $\in 5$-structure $\mathcal{S}$ for any given pre-basic structure $\mathcal{S}_0$ we can also speak about *the* powerclass completion of $\mathcal{S}_0$.

Observations:

1. In (II), "primary" can be replaced by "old" and "natural i, j" by "integer i, j".
2. For a pre-basic structure $\mathcal{S}_0$ and an $\in 5$-structure $\mathcal{S}$ the following are equivalent:
   i. $\mathcal{S}$ is a powerclass completion of $\mathcal{S}_0$.
   ii. $\mathcal{S}$ is the least extension of $\mathcal{S}_0$ that is powerclass complete.

The powerclass completion theorem

Proposition:

The powerclass completion $\mathcal{S}$ of a basic structure $\mathcal{S}_0$ is a powerclass complete basic structure that is a faithful extension of $\mathcal{S}_0$.

Proof:

The proof consists in verifying that $\mathcal{S}$ satisfies (b~1)–(b~11) and is a faithful extension of $\mathcal{S}_0$. This is done in a series of claims below.

Claim A:

1. Axioms (b~2)–(b~4) are satisfied. For every integers m, n,
   i. $(\overline{\in}^{m}) \circledast (\overline{\in}^{n}) \subseteq (\overline{\in}^{m+n})$,
   ii. $(\in) \circledast (\in^{n}) \subseteq (\in^{1+n})$,
   iii. $(\overline{\in}^{m}) \cap (\overline{\ni}^{-m}) = .ec(m)$.
2. Every new object x is both a power member and power container: $x.\in = x.\overline{\in}$ and $x.\ni = x.\overline{\ni}$.
   Corollary: For every old object x,
   - if $x.\in = x.\overline{\in}$ then $x.\in = x.\overline{\in}$. (Similarly in the inverse.)
3. (a) $(\underline{O} \setminus \underline{O}_0) \leq \underline{r}$, (b) $\underline{O}.\in = \underline{O}.\in \cup (\underline{O} \setminus \underline{O}_0)$, (c) $\underline{O}.\in = \underline{O}.\in \cap \underline{O}_0$.
   Corollary: (b~5), (b~6) and (b~7)(b) are satisfied.
4. For every old object x, if $x.ec_0{}^{*-*} = x.\overline{\ni}^{*-*}$ then $x.ec^{*-*} = x.\overline{\ni}^{*-*}$. Corollary: (b~7)(a) is satisfied.
5. Axiom (b~8) is satisfied: If $x.\varepsilon\varepsilon = y$ then: (a) $\{x\} = y.\ni$, (b) $x.\in^{i} \subseteq y.\in^{i-1}$ for every $i \leq 1$, (c) $(x,y) \notin (\overline{\in})$.
6. Axiom (b~10) is satisfied: For every object x, $x.mli < \omega$.

Proof:

1. Let a, b, c be primary objects, i, j, k natural numbers and m, n integers.
   i. $a.ec(i) \overline{\in}^{m} b.ec(j) \overline{\in}^{n} c.ec(k) \leftrightarrow a \overline{\in}^{m+i-j} b \overline{\in}^{n+j-k} c \rightarrow a \overline{\in}^{m+n+i-k} c$.
   ii. $a.ec(i) \in b.ec(j) \overline{\in}^{n} c.ec(k) \leftrightarrow a \in^{1+i-j} b \overline{\in}^{n+j-k} c \rightarrow a \in^{1+n+i-k} c$.
   iii. $a.ec(i) \overline{\in}^{m} b.ec(j) \overline{\in}^{-m} a.ec(i) \leftrightarrow a \overline{\in}^{m+i-j} b \overline{\in}^{-m+j-i} a \leftrightarrow a.ec(m+i-j) = b \leftrightarrow a.ec(i).ec(m) = b.ec(j)$.
2. This follows directly from the prescriptions (α) and (β) ($k = 1$) for $\overline{\in}$ and $\in$.
3. Let x be a new object, $x = a.ec(i)$ for a primary a and a natural $i > 0$. Then
   (a) $a \overline{\in}^{i} \underline{r}$ (since $i > 0$) and thus $x \leq \underline{r}$, (b) $x \overline{\in} \underline{r}$ (since $x \leq \underline{r} \overline{\in} \underline{r}$) and thus $x \in \underline{r}$ (since $x.\in = x.\overline{\in}$).
   To show (c), assume that $x \in y$ and y is old. (That is $y \in \underline{O}.\in \cap \underline{O}_0$.) Then
   - $a \overline{\in}^{1+i} y \rightarrow a \in^{1+i} y \rightarrow \underline{O}_0.\in.\in^{*} \ni y \rightarrow \underline{O}_0.\in \ni y$.
4. Assume that x is an old object such that $x.ec_0{}^{*-*} = x.\ni^{*-*}$ and let y be from $x.\ni^{*-*}$. That is,
   - $b.ec(j) \overline{\in}^{i} x$, for some integer i,

   where b is a primary object and j a natural number such that $y = b.ec(j)$. By definition of $\overline{\in}^{i}$,
   - $b \overline{\in}^{j+i} x \rightarrow b \in x.\overline{\ni}^{*-*} \rightarrow b \in x.ec_0{}^{*-*} \rightarrow y \in x.ec^{*-*}$.
5. Assume $x.\varepsilon\varepsilon = y$. Then both x, y are old (since $.\varepsilon\varepsilon_0 = .\varepsilon\varepsilon$). Therefore, (a) and (c) are satisfied. If i is an integer, $i \leq 1$, and z is a new object from $x.\in^{i}$ then
   - $z \in x.\overline{\in}^{i} \subseteq y.\overline{\in}^{-1}.\overline{\in}^{i} \subseteq y.\overline{\in}^{i-1}$,

which shows that also (b) is satisfied.

6. This is a consequence of the following equivalence: For every object x, and every natural j,
   - $x \epsilon^{1-j} \underline{r} \quad \leftrightarrow \quad a \epsilon^{1+i-j} \underline{r}$ where a is a primary object and i a natural number such that $x = a.ec(i)$.

   (Therefore, $x.mli = sup\{ j \mid x \epsilon^{1-j} \underline{r}, j \in \mathbb{N} \} = sup\{ j \mid a \epsilon^{1+i-j} \underline{r}, j \in \mathbb{N} \} = i + a.mli_0$.) □

Claim B:

1. For every old objects x, y and every natural i, (a) $x \epsilon^i y \quad \leftrightarrow \quad x \epsilon^i y$, (b) $x \overline{\epsilon}^i y \quad \leftrightarrow \quad x \overline{\epsilon}^i y$.
2. For every old object y, (a) $y.\ni \subseteq y.\ni.\downarrow$, (b) $y.\overline{\ni} = y.\overline{\ni}.\downarrow$.

Note: We let $\overline{\epsilon}^k$ be defined in (β) just for $k \leq 1$.

Proof:

1. To prove (a), assume $n > 1$ and let x, y be old objects such that $x \epsilon^n y$. That is, there are old objects $x = x_0, x_1, \ldots, x_{n-1}, x_n = y$ and natural numbers $0 = i_0, i_1, \ldots, i_{n-1}, i_n = 0$ such that

   $x_0.ec(i_0) \epsilon x_1.ec(i_1) \epsilon \cdots \epsilon x_n.ec(i_n)$.

   We can assume that all of $x_1.ec(i_1), \ldots, x_{n-1}.ec(i_{n-1})$ are new objects – otherwise the proof follows by induction over n. We can therefore apply the definition (α) of $(\epsilon) \setminus (\epsilon)$ and write
   - $x_0 \overline{\epsilon}^{1+i_0-i_1} x_1 \overline{\epsilon}^{1+i_1-i_2} \cdots \overline{\epsilon}^{1+i_{n-1}-i_n} x_n$

   which implies $x \overline{\epsilon}^n y$ (and thus $x \epsilon^n y$).

   To prove (b), assume $n > 0$ and let x, y be old objects such that $x \overline{\epsilon}^n y$, that is, $x.ec(n) \leq y$.
   - If $x.ec(n)$ is old then $(x,y) \in .ec_0(n-1) \circledcirc (\overline{\epsilon})$.
   - If $x.ec(n)$ is new then the definition of $\overline{\epsilon}^k$ aplies (use the "adjusted" definition according to the observation.)
2. Assume that y is an old object. Let a be an old object and i a natural number such that $x = a.ec(i)$ is a new object from $y.\ni$ so that $a \overline{\epsilon}^{1+i} y$ by definition of ϵ. In particular, there exists an old object u such that $a \overline{\epsilon}^i u \overline{\epsilon} y$. It follows from $x.ec(-i) = a \overline{\epsilon}^i u$ that $x \leq u$. This shows (a) $y.\ni \subseteq y.\ni.\downarrow$ and also $y.\overline{\ni} \subseteq y.\overline{\ni}.\downarrow$. The $y.\overline{\ni} \supseteq y.\overline{\ni}.\overline{\ni}^0$ inclusion follows by (b~2). □

Claim C:

1. $\mathcal{S}$ preserves the rank of old objects, i.e. for every old object x, $x.d = x.d_0$.
2. Axiom (b~11) is satisfied: $x.\epsilon = x.\overline{\epsilon}$ for every x from $\underline{O} \setminus \underline{O}.\ni$.

Proof:

1. Consider the ranking products $(\underline{O}]_0, \epsilon, \ldots)$ and $(\underline{O}], \epsilon, \ldots)$ of $\mathcal{S}_0$ and $\mathcal{S}$, respectively. Since $\mathcal{S}$ is already known to be a pre-basic structure, $(\underline{O}], \epsilon, \ldots)$ is an extension of $(\underline{O}]_0, \epsilon, \ldots)$, in particular w.r.t. ϵ and $\leq$. It is then sufficient to show that
   - $(y,-j).\ni \subseteq (y,-j).\ni.\downarrow$ for every $(y,-j)$ from $\underline{O}]_0$.

   Assume that $(y,-j)$ is from $\underline{O}]_0$ and let $(x,-i)$ be from $(y,-j).\ni$. We should prove that $(x,-i) \leq (u,k)$ for some (u,k) from $\underline{O}]_0$.
   - If $i \neq 0$ or $j \neq 0$ then put $(u,k) = (x,-i)$. (If $j \neq 0$ then $(x,1-i) = (y,-j)$. If $i \neq 0$ then x is primary, therefore old.)
   - If $i = j = 0$ then $x \epsilon y$ so that claim B2(a) applies: there is an old object u such that $x \leq u \epsilon y$ and therefore $(x,0) \leq (u,0) \epsilon (y,0)$.
2. Apply claims A2 and C1. □

Singleton completion

The diagram on the right shows an extension of a basic structure $\mathcal{S}_0 = (\underline{O}_0, \ldots)$ to a basic structure $\mathcal{S} = (\underline{O}, \ldots)$ by primary singletons. New objects are those from $\{a,b,e\}.\varepsilon\epsilon$ (indicated by orange circles (●)). The difference between $(\underline{O}, \epsilon, \leq)$ and $(\underline{O}_0, \epsilon, \leq)$ is indicated by dashed arrows. Moreover, the $(\epsilon) \setminus (\overline{\epsilon})$ difference is indicated by blue arrows with a highlighted background, similarly as with the introductory sample. In $\mathcal{S}_0$, the difference is $\{(a,w)\}$.

Since $\{a,b,e\} = \underline{O}.\ni \setminus (\underline{T} \cup \underline{O}.\varepsilon c)$, the resulting extension $\mathcal{S}$ is primary singleton complete – every bounded

object that is not terminal or a singleton has a singleton. A subsequent "partial" powerclass completion of $\mathcal{S}$, applied just for the set $\underline{T} \cup \underline{O}.\varepsilon c$, makes $\mathcal{S}$ singleton complete, so that all bounded objects have a singleton.

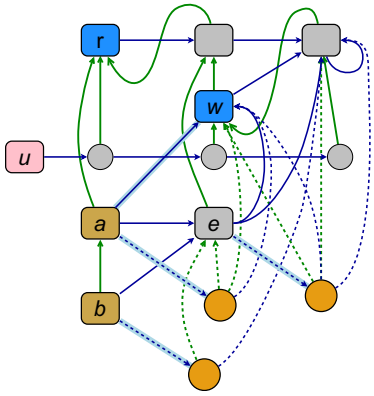

Primary singleton completion

Let $\mathcal{S} = (\underline{O}, \epsilon, \ldots)$ be an $\epsilon 5$-structure and $\mathcal{S}_0 = (\underline{O}_0, \epsilon_0, \ldots)$ a basic structure. We say that $\mathcal{S}$ is a *primary singleton completion* of $\mathcal{S}_0$ if $\mathcal{S}$ is a primary extension of $\mathcal{S}_0$ such that

- $\mathcal{S}$ is primary singleton complete, every new object is a primary singleton, and if $x.\varepsilon\epsilon = y$ and y is new then
  - α. $y.\ni = \{x\}$ and $y.\epsilon = x.\epsilon_0.\bar{\epsilon}_0$,
  - β. $y.\bar{\ni}^i = \{y\}.ec(-i)$ and $y.\bar{\epsilon}^i = x.\epsilon_0.\bar{\epsilon}_0^i \cup x.\bar{\epsilon}_0^{1+i} \cup \{y\}.ec(i)$ for every integer i, i.e.
    - $y.\bar{\ni} = \emptyset$ and $y.\bar{\epsilon} = x.\epsilon_0.\bar{\epsilon}_0$,
    - $y.\mathrm{I}\!\downarrow = \{y\}$ and $y.\mathrm{I}\!\uparrow = x.\epsilon_0 \cup \{y\}$,
    - $y.\bar{\ni}^i = \emptyset$ and $y.\bar{\epsilon}^i = x.\epsilon_0^{1+i}$ for every $i < 0$.

The singleton completion theorem

Proposition:

Let $\mathcal{S}$ be a primary singleton completion of a basic structure $\mathcal{S}_0$. Then $\mathcal{S}$ is a basic structure that is a faithful extension of $\mathcal{S}_0$.

Proof:

We consider an $\epsilon 5$-structure $\mathcal{S} = (\underline{O}, \epsilon, \ldots)$ created from a basic structure $\mathcal{S}_0 = (\underline{O}_0, \epsilon_0, \ldots)$ in the following steps:

I. Extend $(\underline{O}_0, .\varepsilon\epsilon_0)$ to $(\underline{O}, .\varepsilon\epsilon)$ so that $(.\varepsilon\epsilon) \setminus (.\varepsilon\epsilon_0)$ is a bijection between $\underline{O}_0.\varepsilon\epsilon_0(0) \setminus \underline{O}_0.\epsilon\varepsilon_0$ and $\underline{O} \setminus \underline{O}_0$. (That is, define explicitly a new primary singleton for every object from $\underline{O}_0.\varepsilon\epsilon_0(0)$ for which $x.\varepsilon\epsilon_0$ is undefined.) There is obviously exactly one such extension, up to isomorphism.

II. Extend ϵ_0 and $\bar{\epsilon}_0^{(*)}$ to ϵ and $\bar{\epsilon}^{(*)}$ according to the definition of primary singleton completion.

Now the proof consists in verifying that $\mathcal{S}$ is a basic structure that is a faithful extension of $\mathcal{S}_0$ and is singleton complete.

Claim A:

1. For every old objects x, y and every natural i, (a) $x\,\epsilon^i\,y \leftrightarrow x\,\epsilon_0^i\,y$, (b) $x\,\bar{\epsilon}^i\,y \leftrightarrow x\,\bar{\epsilon}_0^i\,y$.
2. For every old object y, $y.\ni \subseteq y.\ni.\mathrm{I}\!\downarrow$.

Proof:

1. Let x, y be old objects and i a natural number. We can assume that $i > 1$. Then
   - $x\,\epsilon^2\,y \leftrightarrow x\,\epsilon_0^2\,y$ since if $x\,\epsilon\,a\,\epsilon\,y$ for some new a then $x.\varepsilon\epsilon = a$, thus $y \in a.\epsilon = x.\epsilon_0.\bar{\epsilon}_0 \subseteq x.\epsilon_0^2$,
   - $x\,\epsilon^i\,y \leftrightarrow x\,\epsilon_0^i\,y$ since new objects are unrelated by ϵ so that induction argument can be used together with the previous case $i = 2$,
   - $x\,\bar{\epsilon}^i\,y \leftrightarrow x\,\bar{\epsilon}_0^i\,y$ since $z.\bar{\ni} = \emptyset$ for every new object z.
2. Assume that y is an old object and let a and b be objects such that $a.\varepsilon\epsilon = b\,\epsilon\,y$ and b is new. By definition of $b.\epsilon$, there is an old object u such that $a\,\epsilon_0\,u\,\bar{\epsilon}_0\,y$. By definition of $b.\mathrm{I}\!\uparrow$, it follows that $b < u$. □

Claim B:

1. (b~2) is satisfied. For every object y, and every integer i, j, (i) $y.\bar{\epsilon}^i.\bar{\epsilon}^j \subseteq y.\bar{\epsilon}^{i+j}$ and (ii) $y.\bar{\ni}^i.\bar{\ni}^j \subseteq y.\bar{\ni}^{i+j}$.

2. (b~3) is satisfied: For every objects x, y, z and every natural i, if $x \epsilon y \epsilon^{-i} z$ then $x \epsilon^{1-i} z$.
3. (b~4) is satisfied: For every objects x, y and every integer i, $x \bar{\epsilon}^{i} y \bar{\epsilon}^{-i} x \quad \leftrightarrow \quad x.ec(i) = y$.
4. (b~5) is satisfied: $\underline{O}.\epsilon \leq \underline{r}$.
5. (b~6) is satisfied: $\underline{T} \subseteq \underline{O}.\ni$.
6. (b~7)(a) is satisfied: $y.\ni^{-i} \subseteq \{y\}.ec(i)$ for every $y \in \underline{T} \cup \underline{O}.\varepsilon\!\!\!\!\!\!\,\epsilon$ and every natural i.
7. (b~7)(b) is satisfied: $x.\epsilon = x.\bar{\epsilon}$ for every $x \in (\underline{T} \cup \underline{O}.\varepsilon\!\!\!\!\!\!\,\epsilon).ec*$.
8. (b~8) is satisfied: If $x.\varepsilon\!\!\!\!\!\!\,\epsilon = y$ then: (a) $\{x\} = y.\ni$, (b) $x.\epsilon^{i} = y.\epsilon^{i-1}$ for every $i \leq 1$, (c) $(x,y) \notin (\bar{\epsilon})$.
9. For every new object $y = x.\varepsilon\!\!\!\!\!\!\,\epsilon$, $y.mli = x.mli + 1$.
   Corollary: (b~10) is satisfied. (Every object has a finite metalevel index.)

Proof:

1. For every new object u and every integer i it follows by definition that
   - $u.\bar{\ni}^{i} \neq \emptyset \quad \leftrightarrow \quad u.\bar{\ni}^{i} = \{u\}$ and $i = 0$.

   This shows that (i) is satisfied for all old objects y and (ii) is satisfied for all objects y. It remains to show that (i) is satisfied if y is new. Assume therefore that $x.\varepsilon\!\!\!\!\!\!\,\epsilon = y$ and y is new. Denote $Y = y.\bar{\epsilon}^{i}.\bar{\epsilon}^{j}$.
   - For $i > 1$ it follows by definition of $\bar{\epsilon}^{i}$ that $Y = y.\bar{\epsilon}^{i-1}.\bar{\epsilon}.\bar{\epsilon}^{j}$ so that it is sufficient to show $y.\bar{\epsilon}.\bar{\epsilon}^{j} \subseteq y.\bar{\epsilon}^{1+j}$ and apply the induction argument.
   - For $i = 1$ we obtain $Y = x.\epsilon.\bar{\epsilon}.\bar{\epsilon}^{j} \subseteq x.\epsilon.\bar{\epsilon}^{1+j}$. Denote $Z = x.\epsilon.\bar{\epsilon}^{1+j}$. It is sufficient to show that $y.\bar{\epsilon}^{1+j} \supseteq Z$.
     - If $j \geq 0$ then $y.\bar{\epsilon}^{1+j} = y.\bar{\epsilon}.\bar{\epsilon}^{j} = x.\epsilon.\bar{\epsilon}^{1+j} = Z$.
     - If $j = -1$ then $y.\bar{\epsilon}^{1+j} = y.\uparrow = x.\epsilon \cup \{y\} \supseteq Z$.
     - If $j < -1$ then $y.\bar{\epsilon}^{1+j} = y.\bar{\epsilon}^{1+j} = x.\epsilon^{2+j} \supseteq Z$.
   - For $i = 0$ we obtain $Y = y.\uparrow.\bar{\epsilon}^{j} = y.\bar{\epsilon}^{j} \cup x.\epsilon.\bar{\epsilon}^{j}$. Denote $Z = x.\epsilon.\bar{\epsilon}^{j}$. We should prove that $y.\bar{\epsilon}^{j} \supseteq Z$.
     - If $j > 0$ then $y.\bar{\epsilon}^{j} = x.\epsilon.\bar{\epsilon}^{j} = Z$.
     - If $j = 0$ then $y.\bar{\epsilon}^{j} = y.\uparrow \cup x.\epsilon \supseteq Z$.
     - If $j < 0$ then $y.\bar{\epsilon}^{j} = x.\bar{\epsilon}^{1+j} \supseteq Z$.
   - For $i < 0$ we obtain $Y = x.\bar{\epsilon}^{1+i}.\bar{\epsilon}^{j} \subseteq x.\bar{\epsilon}^{1+i+j}$. Denote $Z = x.\bar{\epsilon}^{1+i+j}$. It is sufficient to show that $y.\bar{\epsilon}^{i+j} \supseteq Z$.
     - If $i+j > 0$ then $y.\bar{\epsilon}^{i+j} = x.\epsilon.\bar{\epsilon}^{i+j} \supseteq x.\bar{\epsilon}.\bar{\epsilon}^{i+j} = x.\bar{\epsilon}^{1+i+j} = Z$.
     - If $i+j = 0$ then $y.\bar{\epsilon}^{i+j} = \{y\} \cup x.\epsilon \supseteq Z$.
     - If $i+j < 0$ then $y.\bar{\epsilon}^{i+j} = x.\bar{\epsilon}^{1+i+j} = Z$.
2. We first show that for every object y and every natural i, (i) $y.\epsilon.\epsilon^{-i} \subseteq y.\epsilon^{1-i}$ and (ii) $y.\ni^{-i}.\ni \subseteq y.\ni^{1-i}$. Assume that y is new and let x be such that $x.\varepsilon\!\!\!\!\!\!\,\epsilon = y$. Then (ii) is satisfied since

   $y.\ni^{-i}.\ni \neq \emptyset \quad \leftrightarrow \quad y.\ni^{-i}.\ni = \{x\}$ and $i = 0$.

   To show (i), write $y.\epsilon.\epsilon^{-i} = x.\epsilon.\bar{\epsilon}.\bar{\epsilon}^{-i} \subseteq x.\epsilon.\bar{\epsilon}^{1-i}$. Denote $Z = x.\epsilon.\bar{\epsilon}^{1-i}$. It is sufficient to show that $y.\epsilon^{1-i} \supseteq Z$.
   - If $i = 0$ then $y.\epsilon^{1-i} = y.\epsilon = x.\epsilon.\bar{\epsilon} = Z$.
   - If $i = 1$ then $y.\epsilon^{1-i} = y.\uparrow \supseteq x.\epsilon = Z$.
   - If $i > 1$ then $y.\epsilon^{1-i} = y.\bar{\epsilon}^{1-i} = x.\bar{\epsilon}^{2-i} \supseteq Z$.

   Thus, (i) and (ii) hold for every new y. This shows that

   $(*) \quad x \epsilon y \epsilon^{-i} z \quad \rightarrow \quad x \epsilon^{1-i} z \quad (i \in \mathbb{N})$

   is satisfied for every objects x, y, z such that at least one of x or z are new. (Note that this time the y variable is used in the "middle" place.) It remains to show that $(*)$ holds if y is new. Assume therefore that x, y, z are objects such that $x \epsilon y \epsilon^{-i} z$ and y is new. Then necessary $x.\varepsilon\!\!\!\!\!\!\,\epsilon = y$ and it is sufficient to show that $x.\epsilon.\epsilon^{-i} \subseteq x.\epsilon^{1-i}$.
   - If $i = 0$ then $x.\epsilon.\epsilon^{-i} = y.\uparrow = x.\epsilon$.
   - if $i < 0$ then $x.\epsilon.\epsilon^{-i} = x.\epsilon.\epsilon^{-i} \subseteq x.\epsilon^{1-i} = x.\epsilon^{1-i}$.
3. If x and y are old then (b~4) in $\mathcal{S}_0$ applies. If x or y is new then

   $x \bar{\epsilon}^{i} y \bar{\epsilon}^{-i} x \quad \leftrightarrow \quad i = 0$ and $x \leq y \leq x \quad \leftrightarrow \quad x.ec(i) = y$.
4. If $x.\varepsilon\!\!\!\!\!\!\,\epsilon = y$ and y is new then $y.\uparrow \supseteq x.\epsilon \ni \underline{r}$.
5. This is a consequence of new objects being non-terminal.
6. Let y be from $\underline{T} \cup \underline{O}.\varepsilon\!\!\!\!\!\!\,\epsilon$ and let u be from $y.\ni^{-i}$ for a natural i. We should prove that $y.ec(i) = u$. For u and y both being old this is asserted by (b~7) in $\mathcal{S}_0$. If y is new then by the prescription for primary singleton completion, $i = 0$ and $u = y$ so that the requested equality is satisfied.
7. Let x be from $(\underline{T} \cup \underline{O}.\varepsilon\!\!\!\!\!\!\,\epsilon).ec*$. If x is old then $x.\epsilon = x.\epsilon$ (since $x.\varepsilon\!\!\!\!\!\!\,\epsilon$ is undefined) and thus $x.\epsilon = x.\bar{\epsilon}$. If x is new then the same equality holds by the prescription for primary singleton completion.
8. Assume that $x.\varepsilon\!\!\!\!\!\!\,\epsilon = y$. If y is old then so is x and (b~8) in $\mathcal{S}_0$ applies:

(a) $\{x\} = y.\ni = y.\ni$, (b) $x.\epsilon^i = x.\epsilon^i = y.\epsilon^{i-1} = x.\epsilon^{i-1}$ for every $i \le 1$, (c) $(x,y) \notin (\overline{\epsilon})$.

For a new object y the definition of primary singleton completion applies.

9. Let $x.\varepsilon = y$ and y be new. By definition, $y.\epsilon^i = x.\epsilon^{1-i}$ for every $i > 0$, so that
   - $y\ \epsilon^{1-(i+1)}\ \underline{r} \quad \leftrightarrow \quad x\ \epsilon^{1-i}\ \underline{r}$.

   Since x is non-terminal it follows that $x\ \epsilon^{1-i}\ \underline{r}$ is satisfied for $i > 0$ (put $i = x.mli$). As a consequence, $y.mli = x.mli+1$. □

Claim C:

1. $\mathcal{S}$ preserves the rank of old objects, i.e. for every old object x, $\quad x.d = x.d_0$.
2. Axiom (b~11) is satisfied: $\quad x.\epsilon = x.\overline{\epsilon}$ for every x from $\underline{O} \setminus \underline{O}.\ni$.

Proof:

1. Consider the ranking products $(\underline{O}]_0, \epsilon, \ldots)$ and $(\underline{O}], \epsilon, \ldots)$ of $\mathcal{S}_0$ and $\mathcal{S}$, respectively. Let y be an old object. To prove that $y.d = y.d_0$ it is sufficient to show that

   $(*)$ for every $(x,-i)$ from $(y,0).\ni$ there is an $(u,-k)$ from $(y,0).\ni$ such that $\quad (x,-i).d \le (u,-k).d$.

   Assume $(x,-i) \epsilon (y,0)$ and $(x,-i)$ is not from $\underline{O}]_0$ so that x is a new object. Let a be such that $a.\varepsilon = x$. The requested pair $(u,-k)$ in $(*)$ is then found as follows. If $i = 0$ then $x \epsilon y$ so that, by claim A2, $x \le u \epsilon y$ for some u and thus $(u,0)$ is the requested pair. Assume further that $i > 0$. Then
   - $x\ \overline{\epsilon}^{1-i}\ y$ (by definition of $(\underline{O}], \epsilon)$),
   - $a\ \epsilon^{2-i}\ y$ (since, by definition, $a\ \epsilon^{1-j}\ y \leftrightarrow x\ \epsilon^{-j}\ y$ for every natural j),
   - $(a,1-i) \epsilon (y,0)$ (a consequence of $a\ \epsilon^{2-i}\ y$).

   Since $a.mli = x.mli-1$, it follows that $(x,-i).d \le (a,1-i).d$ and thus $(a,1-i)$ is the requested pair.

   Finally, assume that y is new and $x.\varepsilon = y$. Since $y.\ni = \{x\}$ and x is bounded it follows that
   - $(y,0).d$ equals the maximum of $(x,0).d + 1$ and $(y,-1).d + 1$.

   Because $(y,-1).d = y.mli-1 = x.mli \le x.d = (x,0).d$ the equality $y.d = x.d+1$ follows.
2. By claim C1, $\mathcal{S}$ and $\mathcal{S}_0$ have the same unbounded objects. If x is an unbounded (and therefore old) object then, $x.\epsilon = x.\epsilon = x.\overline{\epsilon} = x.\overline{\epsilon}$. □

Extensional pre-completion

The diagram on the right shows an extension of a powerclass complete basic structure $\mathcal{S}_0 = (\underline{O}_0, \ldots)$ to a powerclass complete basic structure $\mathcal{S} = (\underline{O}, \ldots)$ by an attachment of a free leaf u. New objects are those from $u.ec^*$. The difference between $(\underline{O}, \le)$ and $(\underline{O}_0, \le)$ is indicated by dashed brown arrows (again in the reflexive transitive reduction). The extension causes the following change for the m object (of which u is a direct free leaf in $\mathcal{S}$, i.e. $u.\tau = m$):

$m.\ni = \{a, b\} \quad \dashrightarrow \quad m.\ni = \{a, b, u.ec(2)\}$.

As a result, m becomes extensionally consistent (which was not the case in $\mathcal{S}_0$ since $m.\ni = n.\ni$ and $m \not\le n$). Moreover, all new objects are extensionally consistent as well as all old objects that were extensionally consistent in $\mathcal{S}_0$.

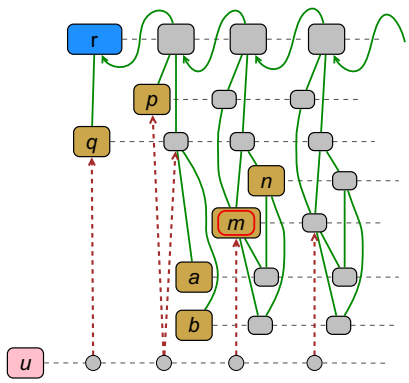

The above method can be used to achieve extensional consistency and powerclass consistency for all objects.

Extensional pre-completion

Let $\mathcal{S} = (\underline{O}, \epsilon, \ldots)$ be an $\epsilon 5$-structure and $\mathcal{S}_0 = (\underline{O}_0, \epsilon, \ldots)$ a basic structure that is metaobject complete. We say that $\mathcal{S}$ is an *extensional pre-completion* of $\mathcal{S}_0$ if $\mathcal{S}$ is an extension of $\mathcal{S}_0$ such that the following conditions are satisfied:

I. $.ec$ is total, well-founded and injective. (So is therefore $(.ec) \setminus (.ec_0)$ in the restriction to new objects.)

II. $.\varepsilon\!\!\!\varepsilon$ is the same as $.\varepsilon\!\!\!\varepsilon_0$.

III. For every new primary object x and every $i \geq 0$, $j \leq 1$,

- $x.ec(i).\ni = \{x\}.ec(i-1)$,
- $x.ec(i).\overline{\ni}^j = \{x\}.ec(i-j)$.

In particular, the set $\underline{O}_0$ of old objects is closed w.r.t. $.\epsilon^{*-*}$.

IV. For every new primary object x, there is a unique old primary object y such that, denoting $k = y.mli$, for every $i \geq 0$, $j \leq 1$,

- $x.\overline{\epsilon}^i = y.\overline{\epsilon}^{i-k} \uplus \{x\}.ec(i)$, that is, $x.\tau = y$, i.e. x is a direct free leaf of y,
- $x.ec(i).\epsilon = x.\overline{\epsilon}^{i+1}$,
- $x.ec(i).\overline{\epsilon}^j = x.\overline{\epsilon}^{i+j}$.

V. For every old object y, the set $y.\tau(-1) \setminus \underline{O}_0$ of new direct free leaves of y has exactly

- 0 elements if y is *pre-consistent* in $\mathcal{S}_0$, i.e.

  (⊙) all objects from $y.ec^*$ are e+p consistent (extensionally consistent and powerclass consistent),
- 2 elements otherwise.

(There can be a finer prescription which adds exactly 1 new direct free leaf of y in relevant cases.)

Observation: Every metaobject complete basic structure $\mathcal{S}_0$ has an extensional pre-completion $\mathcal{S}$.

Proof:
Let $\mathcal{S}_0 = (\underline{O}_0, \epsilon\!\!\!\epsilon, \overline{\epsilon\!\!\!\epsilon}^{(*)}, \underline{r}, .ec_0, \varepsilon\!\!\!\varepsilon_0)$ be a metaobject complete basic structure and construct $\mathcal{S}$ as follows.

1. Let $(N, \underline{O}_0, .ec_1, .\tau_1)$ be a two-sorted structure that is isomorphic to $(\dot{N}, \underline{O}_0, .ec_1, .\tau_1)$ where
   - $\dot{N} = Y \times \{0,1\} \times \mathbb{N}$ where Y is the set of (old) objects that do not satisfy (⊙),
   - $.ec_1$ is the map $\dot{N} \to \dot{N}$ such that $(y,i,j).ec_1 = (y,i,j+1)$,
   - $.\tau_1$ is the map $\dot{N} \to \underline{O}_0$ such that $(y,i,j).\tau_1 = y$.
2. Let $\mathcal{S} = (\underline{O}, \epsilon, \overline{\epsilon}^{(*)}, \underline{r}, .ec, .\varepsilon\!\!\!\varepsilon)$ be an $\epsilon 5$-structure that is an extension of $\mathcal{S}_0$ defined by:
   - $\underline{O} = \underline{O}_0 \uplus N$, $(.ec) = (.ec_1) \uplus (.ec_0)$, $.\varepsilon\!\!\!\varepsilon = .\varepsilon\!\!\!\varepsilon_0$,
   - ϵ and $\overline{\epsilon}^{(*)}$ are extensions of $\epsilon\!\!\!\epsilon$ and $\overline{\epsilon\!\!\!\epsilon}^{(*)}$ according to III and IV. The y object in IV equals $x.\tau_1$. □

The extensional pre-completion theorem

Proposition:

Let $\mathcal{S}$ be an extensional pre-completion of a metaobject complete basic structure $\mathcal{S}_0$. Then

- $\mathcal{S}$ is a basic structure that is a faithful extension of $\mathcal{S}_0$, and
- $\mathcal{S}$ is metaobject complete, extensionally consistent and powerclass consistent.

Proof:
Let $\mathcal{S} = (\underline{O}, \epsilon, \ldots)$ be an extensional pre-completion of a metaobject complete basic structure $\mathcal{S}_0 = (\underline{O}_0, \epsilon\!\!\!\epsilon, \ldots)$.

Claim A: (Observations)

1. For every old objects x, y and every natural i, (a) $x\,\epsilon^i\,y \leftrightarrow x\,\epsilon\!\!\!\epsilon^i\,y$, (b) $x\,\overline{\epsilon}^i\,y \leftrightarrow x\,\overline{\epsilon\!\!\!\epsilon}^i\,y$.
2. For every new object x and every integer i,
   a. $x.\ni^i = x.\overline{\ni}^i = \{x\}.ec(-i)$ (i.e. $x\,\epsilon^i\,y \leftrightarrow x\,\overline{\epsilon}^i\,y \leftrightarrow x.ec(i) = y$ for every new objects x, y),
   b. $x.\overline{\epsilon} = x.\epsilon$. □

Claim B:

1. (b~2) is satisfied. For every objects x, y, z and every integer k, ℓ if $x\,\overline{\epsilon}^k\,y\,\overline{\epsilon}^\ell\,z$ then $x\,\overline{\epsilon}^{k+\ell}\,z$.
2. (b~3) is satisfied: For every objects x, y, z and every natural k, if $x\,\epsilon\,y\,\epsilon^{-k}\,z$ then $x\,\epsilon^{1-k}\,z$.
3. (b~4) is satisfied: $(\overline{\epsilon}^i) \cap (\overline{\ni}^{-i}) = .ec(i)$ for every integer i.
4. (b~5) is satisfied: $\underline{O}.\epsilon \leq \underline{r}$.
5. (b~6) is satisfied: $\underline{O} = \underline{O}.\ni$.
6. (b~7)(a) is satisfied: $z.\ni^{-i} \subseteq \{z\}.ec(i)$ for every $z \in \underline{T} \cup \underline{O}.\varepsilon\!\!\!\varepsilon$ and every natural i.
7. (b~7)(b) is satisfied: $x.\epsilon = x.\overline{\epsilon}$ for every $x \in (\underline{T} \cup \underline{O}.\varepsilon\!\!\!\varepsilon).ec^*$.
8. (b~8) is satisfied: If $x.\varepsilon\!\!\!\varepsilon = y$ then: (a) $\{x\} = y.\ni$, (b) $x.\epsilon^i = y.\epsilon^{i-1}$ for every $i \leq 1$, (c) $(x,y) \notin (\overline{\epsilon})$.

9. (b~10) is satisfied: $\underline{O}.mli < \omega$.
10. (b~11) is satisfied: $x.\overline{\epsilon} = x.\epsilon$ for every unbounded object x.

Proof:

1. Let $x\,\overline{\epsilon}^{k}\,y\,\overline{\epsilon}^{\ell}\,z$, $k, \ell \in \mathbb{Z}$. Moreover, let $(a,i) = (x.pr, x.eci)$ so that $x = a.ec(i)$. Since the set $\underline{O}_0$ of old objects is closed w.r.t. $.\epsilon^{*-*}$ there are 3 cases to check:
   - If all of x, y, z are new then $x.ec(k) = y$ and $y.ec(\ell) = z$ so that $x.ec(k+\ell) = z$ and thus $x\,\overline{\epsilon}^{k+\ell}\,z$.
   - Assume that x and y are new and z is old. Then
     $$a.ec(i+k) = x.ec(k) = y\,\overline{\epsilon}^{\ell}\,z \quad\rightarrow\quad a\,\overline{\epsilon}^{i+k+\ell}\,z \quad\rightarrow\quad x = a.ec(i)\,\overline{\epsilon}^{k+\ell}\,z.$$
   - Assume that x is new and y and z is old, and denote $m = a.\tau.mli$. Then
     $$a.ec(i)\,\overline{\epsilon}^{k}\,y\,\overline{\epsilon}^{\ell}\,z \leftrightarrow a\,\overline{\epsilon}^{i+k}\,y\,\overline{\epsilon}^{\ell}\,z \leftrightarrow a.\tau\,\overline{\epsilon}^{i+k-m}\,y\,\overline{\epsilon}^{\ell}\,z \rightarrow a.\tau\,\overline{\epsilon}^{i+k+\ell-m}\,z \leftrightarrow a.ec(i)\,\overline{\epsilon}^{k+\ell}\,z.$$
2. Let $x\,\epsilon\,y\,\epsilon^{-k}\,z$, $k \in \mathbb{N}$. If x is new then $x\,\overline{\epsilon}\,y$ and thus (b~2) applies. Otherwise, all of x, y and z are old and thus (b~3) in $\mathcal{S}_0$ applies.
3. (b~4) follows by $\underline{O}_0.\epsilon^{*-*} = \underline{O}_0$ and claim A2.
4. Let x be a new object and let a,i,y be such that $a.ec(i) = x$ and $a.\tau = y$. Denote $k = y.mli$. Then
   $$x.\epsilon = a.\overline{\epsilon}^{i+1} = y.\overline{\epsilon}^{1+i-k} \uplus \{a\}.ec(i+1).$$
   It follows that $x.\epsilon$ cannot contain an old object z that is terminal in $\mathcal{S}_0$. (It would follow from $z \in y.\overline{\epsilon}^{1+i-k} \cap \underline{T}$ that $z = y$ and $k = 0$ and thus $z\,\overline{\epsilon}^{1+i}\,z$ for $i \geq 0$ which is not possible.) Since by definition $a.ec(i+1).\updownarrow = a.\overline{\epsilon}^{i+1}$ it follows that
   $$a.ec(i+1) < y.\overline{\epsilon}^{1+i-k} \leq \underline{r}$$
   and thus $a.ec(i+1) < \underline{r}$. This shows that $x.\epsilon \leq \underline{r}$ and, consequently, $\underline{O}.\epsilon \leq \underline{r}$.
5. The $\underline{O} = \underline{O}.\ni$ equality follows by: $x\,\epsilon\,x.ec$ for every new object x.
6. Assume that $z \in \underline{T} \cup \underline{O}.\varepsilon\wp$ and $i \in \mathbb{N}$. If z is new then $z.\ni^{-i} = \{z\}.ec(i)$ by definition of extensional pre-completion. Assume further that z is old and let a be a new primary object, $j \in \mathbb{N}$ and denote $k = a.\tau.mli$. Then the following equivalences are satisfied:
   $$a.ec(j)\,\epsilon^{-i}\,z \quad\leftrightarrow\quad a\,\overline{\epsilon}^{j-i}\,z \quad\leftrightarrow\quad a.\tau\,\overline{\epsilon}^{j-i-k}\,z \quad\leftrightarrow\quad a.\tau = z \text{ and } k = 0 \text{ and } j = i.$$
   Since z satisfies the (⊙) condition the $a.\tau = z$ is disallowed. This shows that all objects from $z.\ni^{-i}$ are old and thus $z.\ni^{-i} = z.\ni^{-i} = \{z\}.ec(i)$ by (b~7) in $\mathcal{S}_0$.
7. (b~7)(b) follows by $\underline{O}_0.\epsilon^{*-*} = \underline{O}_0$ and the $x.\epsilon = x.\overline{\epsilon}$ equality which holds for every new object x.
8. Assume that $x.\varepsilon\wp = y$ so that both x and y are old objects. To show that $y.\ni$ cannot contain new objects and thus (b~8)(a) is satisfied, proceed similarly as in the proof of (b~7). Subsequently, (b~8)(b) follows by $\underline{O}_0.\epsilon^{*-*} = \underline{O}_0$ and (b~8)(c) follows by embedding of $\overline{\epsilon}$.
9. By embedding of $\overline{\epsilon}^{i}$, the metalevel index of old objects is preserved. Since new objects are from $\underline{T}.ec^{*}$ and $\mathcal{S}$ is already asserted to be pre-basic, it follows that for every new object x, $x.mli = x.eci$ which is finite by definition. (Apply (a) $x.mli = 0$ for $x \in \underline{T}$ and (b) $x.ec(i).mli = x.mli + i$.)
10. Since new objects are from $\underline{T}.ec^{*}$, every unbounded object x is old and is subject to the $x.\overline{\epsilon} = x.\epsilon$ equality as a consequence of $\underline{O}_0.\epsilon = \underline{O}_0$. □

Claim C:

1. $\mathcal{S}$ preserves the rank of old objects, i.e. for every old object x, $x.d = x.d_0$.
2. $\mathcal{S}$ is metaobject complete and e+p consistent (extensionally consistent and powerclass consistent).

Proof:

1. Observe first that since new objects are from $\underline{T}.ec^{*}$ and $\mathcal{S}$ is pre-basic it follows that
   $$x.d = x.mli = x.eci \text{ for every new object } x.$$
   Consider the ranking products $(\underline{O}]_0, \epsilon, \ldots)$ and $(\underline{O}], \epsilon, \ldots)$ of $\mathcal{S}_0$ and $\mathcal{S}$, respectively. Observe that since new objects of $\mathcal{S}$ are from $\underline{T}.ec^{*}$ it follows that new objects of $(\underline{O}], \epsilon, \ldots)$ have zero index, that is, they are of the form $(x,0)$ where x is a new object of $\mathcal{S}$. Let z be an old object that is well-founded in $(\underline{O}, \epsilon)$ and thus in $(\underline{O}],\epsilon)$. It is sufficient to show that
   $$\text{for every new object } \dot{x} \text{ from } (z,0).\ni \text{ there is an old object } \dot{b} \text{ from } (z,0).\ni \text{ such that } \dot{x}.d \leq \dot{b}.d.$$
   Assume therefore that $\dot{x} = (x,0)$ is a new object from $(z,0).\ni$ so that $x\,\epsilon\,z$ and let a, i, k be such that $a.ec(i) = x$ and $k = a.\tau.mli$. Then the requested $\dot{b}$ object is found according to:
   $$x\,\epsilon\,z \quad\leftrightarrow\quad a.\tau\,\overline{\epsilon}^{1+i-k}\,z \quad\leftrightarrow\quad \text{(a) } i \leq k \text{ and } (a.\tau, i-k)\,\epsilon\,(z,0) \text{ (by definition of } (\underline{O}],\epsilon)) \text{ or}$$
   $$\text{(b) } i \geq k \text{ and } a.\tau.ec(i-k)\,\epsilon\,z \text{ (by properties of } .ec).$$

In the (a) case, put $\dot{b} = (a.\tau, i\text{-}k)$, in the (b) case, put $\dot{b} = (a.\tau.ec(i\text{-}k),0)$. In both cases, $\dot{b}.d = k + (i\text{-}k) = \dot{x}.d$.

2. Since $\mathcal{S}_0$ is metaobject complete, and, in the restriction to new objects, $.ec$ is total and identical to $.\varepsilon c$, it follows that $\mathcal{S}$ is metaobject complete. To show that $\mathcal{S}$ is e+p consistent, let x be an object.
   - If x is new then it is a terminal or a singleton and is therefore e+p consistent by observations about extensional consistency and powerclass consistency.
   - If x is an old object that is not e+p consistent in $\mathcal{S}_0$, then $x.pr$ is subject to the (⊙) condition in the definition of extensional pre-completion. As a consequence, $x.pr$ has at least 2 direct free leaves. Since their powerclass chains are infinite, proposition B3 applies.
   - If x is an old object that is already e+p consistent in $\mathcal{S}_0$ then
     - x is extensionally consistent in $\mathcal{S}$ since for every object y,
       $\emptyset \neq x.\ni \subseteq y.\ni \quad \rightarrow \quad y$ is old and $\emptyset \neq \underline{O}_0 \cap x.\ni \subseteq \underline{O}_0 \cap y.\ni \quad \rightarrow \quad x \leq y$,
     - x is powerclass consistent in $\mathcal{S}$ since for every non-empty set Y of old objects, all objects from $Y.\triangle$ are old. □

Rank pre-completion

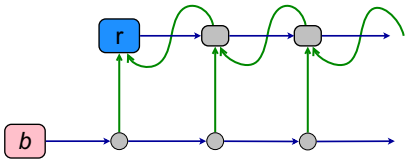

The diagram on the right shows a basic structure $\mathcal{S}$ that is

a. powerclass complete,
b. extensionally consistent (for every natural i, $\underline{r}.ec(i).\ni = b.ec(i).ec*$ and $b.ec(i+1).\ni = \{b\}.ec(i)$ and thus $x.\ni \subseteq y.\ni \rightarrow x \leq y$ for every non-terminal x,y),
c. singleton complete (since $\underline{T}.ec* = \underline{O}.\ni$), and
d. powerclass consistent ($\underline{r}$ is not powerclass-like since $\{b,b.ec\}$ has no upper bound).

If $\underline{\varpi} = \omega$ (recall that $\underline{\varpi}$ is a fixed limit ordinal and ω is the least limit ordinal) then $\mathcal{S}$ is also

e. ϵ-ranked

and thus pre-complete. If $\underline{\varpi} > \omega$ then $\mathcal{S}$ is not ϵ-ranked and needs to be equipped with additional bounded objects to become pre-complete.

Note: The $\mathcal{S}$ structure shown by the diagram is a minimal basic structure such that (a) and (b) are satisfied and thus minimal such that (a)–(d) are satisfied. It follows that if $\underline{\varpi} = \omega$ then $\mathcal{S}$ is a minimal pre-complete structure.

The omissible case $\underline{\varpi} = \omega$

Proposition: Let $\mathcal{S}$ be a basic structure such that (a) $(\epsilon) = (\epsilon) \circledcirc (\epsilon^0)$ and (b) $\underline{T}.\epsilon* = \underline{O}$ (i.e. $\mathcal{S}$ is ϵ-grounded and therefore ϵ-ranked). Then the following are satisfied:

1. For every object x, (recall that $r_\epsilon(x)$ denotes the ϵ-rank of x)
   $r_\epsilon(x) = x.d$ if x is well-founded in ϵ,
   $r_\epsilon(x) \geq \omega$ otherwise.
2. Corollary: If $\underline{\varpi} = \omega$ then $\mathcal{S}$ is ϵ-ranked.

Proof:

1. Let W be the set of objects that are well-founded in ϵ and denote $r()$ the rank function in (W,ϵ). Let x be an object from W. If $r(x) \leq \underline{\varpi}$ then $x.\ni = x.\ni$ and thus $r(x) = r_\epsilon(x) = r_\epsilon(x) = x.d$. Assume that $r(x) > \underline{\varpi}$. Then $\underline{\varpi} \leq r(u)$ for some u from $x.\ni$ and thus
   $\underline{\varpi} = u.d = sup(u.\ni.d)$ (by the induction assumption)
   $\leq sup(u.\ni^0.d)$ (since $(\epsilon) = (\epsilon) \circledcirc (\epsilon^0)$)
   $\leq sup(x.\ni.d)$ (since $u \,\overline{\epsilon}\, x$ so that $u.\ni^0 \subseteq x.\ni$)
   $= r_\epsilon(x)$.

   It follows that $r_\epsilon(x) = r_\epsilon(x) = x.d = \underline{\varpi}$. Finally, if $x \in \underline{O} \setminus W$ then
   $x.\ni^i \neq \emptyset$ for every natural i (a consequence of non-well-foundedness of x),)
   $\leftrightarrow \quad x \in \underline{O}.\epsilon^i$ for every natural i

$\rightarrow$ $x \in \underline{T}.\epsilon^i$ for infinitely many natural i (since $\underline{T}.\epsilon^* = \underline{O}$)

$\leftrightarrow$ $x \in \underline{T}.\epsilon^i$ for infinitely many natural i (by proposition A2)

$\rightarrow$ $r_\epsilon(x) \geq \omega$ (by definition of ϵ-rank).

□

Rank pre-complete structure

We say that a basic structure $\mathcal{S}$ is *rank pre-complete* if every primary object that is non-well-founded in ϵ is ϵ-ranked.

Observation: Let $\mathcal{S}$ be a basic structure that is *rank pre-complete*.

1. If $(\epsilon) = (\epsilon) \circledast (\epsilon^0)$ then every non-well-founded object is ϵ-ranked.
2. Corollary: If, in addition, $\mathcal{S}$ is extensionally consistent and metaobject complete then $\mathcal{S}$ is ϵ-ranked.

Proof:

1. This is shown by

   $x.ec = y \;\rightarrow\; x.\ni = x.\ni^0.\ni = y.\ni.\ni \;\rightarrow\; r_\epsilon(x) \leq r_\epsilon(y)$.

   As a consequence, for every object x, $r_\epsilon(x) = \underline{\omega} \;\leftrightarrow\; r_\epsilon(x.pr) = \underline{\omega}$.
2. Let $\mathcal{S}$ be a basic structure that is (a) is extensionally consistent, (b) metaobject complete (i.e. (b_1) powerclass complete and (b_2) singleton complete) and (c) rank pre-complete. By the ϵ-levelling proposition, it follows from (a) and (b_1) that $\mathcal{S}$ is ϵ-levelled, in particular $\underline{T}.\epsilon^* = \underline{O}$. Moreover, it follows from (b_2) that $(\epsilon) = (\epsilon) \circledast (\epsilon^0)$ so that, denoting W the set of objects that are well-founded in ϵ, for every object x,
   - if $x \notin W$ then x is ϵ-ranked according to the previous proposition,
   - if $x \in W$ then x is ϵ-ranked according to proposition 1 in the previous subsection. □

Rank pre-completion

Let $\mathcal{S} = (\underline{O}, \epsilon, \overline{\epsilon}^{(*)}, \underline{r}, .ec, .\varepsilon\epsilon)$ be an $\epsilon 5$-structure and $\mathcal{S}_0 = (\underline{O}_0, \epsilon, \ldots)$ a basic structure. We say that $\mathcal{S}$ is a *rank pre-completion* of $\mathcal{S}_0$ if $\mathcal{S}$ is an extension of $\mathcal{S}_0$ such that

(1) $.ec = .ec_0$ and $.\varepsilon\epsilon = .\varepsilon\epsilon_0$,

and there is a (necessarily unique) map $.\tau$ from $\underline{O} \setminus \underline{O}_0$ to $\underline{O}_0$ such that the following are satisfied:

(2) $\underline{O}.\tau$ is the set all non-well-founded primary objects of $\mathcal{S}_0$ that are not ϵ-ranked in $\mathcal{S}_0$.

(3) For every object y from $\underline{O}.\tau$, if $X = \{y\}.\tau(-1)$ (i.e. X is the fiber of y under $.\tau$) then the following holds:

(a) X is closed w.r.t. $.\ni^{*-*}$.

(b) For every natural $k > 0$, both $y.\ni^{-k} \cap X$ and $X.\ni^{-k}$ are empty.

(c) $X \subseteq y.\ni \cap y.\overline{\ni} \cap y.\mathrm{I}$.

(d) $(X, \overline{\epsilon}) = (X, \epsilon) = (X, <) \simeq (\underline{\omega}, <)$.

In (d), $(X, <) \simeq (\underline{\omega}, <)$ means that $(X, <)$ is isomorphic to the strict order between ordinals less than $\underline{\omega}$.

(4) For every new object x, every old object z such that $z \neq x.\tau$ and every integer $k \leq 1$,

$x\,\epsilon^k\,z \;\leftrightarrow\; x\,\overline{\epsilon}^k\,z \;\leftrightarrow\; x.\tau\,\overline{\epsilon}^i\,z$ for some integer $i \leq k$.

Note that ϵ^k and $\overline{\epsilon}^k$ can be used interchangeably here since $x.\tau$ is unbounded.

Observation: Every basic structure $\mathcal{S}_0$ has a unique rank pre-completion $\mathcal{S}$, up to isomorphism.

Proof:

Given a basic structure $\mathcal{S}_0 = (\underline{O}_0, \epsilon, \ldots)$, proceed in the following steps.

I. Let $\dot{N}$ be the set of all pairs (x,i) where x an old primary objects that is not ϵ-ranked in $\mathcal{S}_0$ and i is an ordinal number less than $\underline{\omega}$. Define relations ϵ, $\leq$, $\overline{\epsilon}$ and ϵ^k, $k > 0$, on $\dot{N}$ by
   - $(x,i)\,\epsilon\,(y,j) \;\leftrightarrow\; x = y$ and $i < j$,
   - $(x,i) \leq (y,j) \;\leftrightarrow\; x = y$ and $i \leq j$,
   - $(\dot{N}, \overline{\epsilon}) = (\dot{N}, \epsilon)$ and $(\dot{N}, \epsilon^k) = \varnothing$.

II. Let $(N, \epsilon, \overline{\epsilon}^{(*)})$ be isomorphic to $(\dot{N}, \epsilon, \overline{\epsilon}^{(*)})$ via $.v : \dot{N} \rightarrow N$ and let $.\tau$ be the unique map $N \rightarrow \underline{O}_0$ such that

$(x,i).v.\tau = x$.

III. Let $\mathcal{S} = (\underline{O}, \epsilon, \overline{\epsilon}^{(*)}, \underline{r}, .ec, .\varepsilon\!\!\!\varepsilon)$ be an extension of $\mathcal{S}_0$ such that

- $.ec = .ec_0$ and $.\varepsilon\!\!\!\varepsilon = .\varepsilon\!\!\!\varepsilon_0$,
- $\underline{O} = \underline{O}_0 \uplus N$,
- $(N, \epsilon, \overline{\epsilon}^{(*)})$ is a restriction of a reduct of $\mathcal{S}$,
- the intersection of ϵ and ϵ^k, $k \le 1$, with $N \times \underline{O}_0$ is given by (3bc) and (4). □

The rank pre-completion theorem

Proposition:

Let $\mathcal{S}$ be a rank pre-completion of a basic structure $\mathcal{S}_0$. Then

i. $\mathcal{S}$ is a basic structure that is a faithful extension of $\mathcal{S}_0$,

ii. $\mathcal{S}$ is rank pre-complete.

Proof:

The proof is accomplished in a series of claims below. Assume that $\mathcal{S} = (\underline{O}, \epsilon, \ldots)$ is a rank pre-completion of a basic structure $\mathcal{S}_0 = (\underline{O}_0, \epsilon, \ldots)$.

Claim A: (Observations)

1. The set $\underline{O}_0$ of old objects is closed w.r.t. $.\epsilon^{*-*}$.
   Corollary: For every old objects x, y and every natural i, (a) $x\,\epsilon^i\,y \leftrightarrow x\,\epsilon_0^i\,y$, (b) $x\,\overline{\epsilon}^i\,y \leftrightarrow x\,\overline{\epsilon}_0^i\,y$.
2. For every new object x, $x.mli = x.\tau.mli$.
3. For every new object x and every integer k, $x.\overline{\ni}^k = x.\ni^k$ and $x.\overline{\epsilon}^k = x.\epsilon^k$. (In particular, $x.\epsilon = x.\overline{\epsilon}$.)
4. For every new object x and every integer k, $x\,\epsilon^k\,x.\tau \leftrightarrow x\,\overline{\epsilon}^k\,x.\tau \leftrightarrow k \ge 0$.
5. The set $\underline{O}_0.\ni$ of old bounded objects is closed w.r.t. $.\ni^{*-*}$.
6. The set of old objects that are well-founded in $(\underline{O}_0, \epsilon)$ is closed w.r.t. $.\ni^{*-*}$.

Proof:

1. The $\underline{O}_0 = \underline{O}_0.\epsilon^{*-*}$ equality is a consequence of (3a).
2. Let x be a new object and k a natural number. If $x.\tau = \underline{r}$ then $x\,\epsilon^{1-k}\,\underline{r} \leftrightarrow k \le 1$ by (3bc). Otherwise (4) applies:
   $x\,\epsilon^{1-k}\,\underline{r} \quad \leftrightarrow \quad x.\tau\,\epsilon_0^{1-i}\,\underline{r}$ for some natural $i \ge k \quad \leftrightarrow \quad x.\tau\,\epsilon_0^{1-k}\,\underline{r}$.
   It follows in both cases that $x.mli = x.\tau.mli$.
3. The equalities follow directly from (3) and (4).
4. Let x be a new object and k an integer. For $k \le 1$ the requested equivalences are asserted by (3bc). Assume that $k > 1$ and denote $X = \{x\}.\tau.\tau(-1)$. Then it follows from (3d) that $x.\overline{\epsilon}^{k-1} \cap X = x.\epsilon^{k-1} \cap X \ne \emptyset$ (the non-emptiness is a consequence of ϖ being a limit ordinal) so that $x.\tau \in x.\overline{\epsilon}^{k-1}.\overline{\epsilon} \cap x.\epsilon^{k-1}.\epsilon$.
5. Assume that x is a new object, and z is an old object such that $x\,\epsilon^k\,z$ for some integer $k \le 1$. We have to show that z is unbounded in $\mathcal{S}_0$. If $x.\tau = z$ then z is unbounded by definition of $\underline{O}.\tau$. For $x.\tau \ne z$ condition (4) applies so that $x.\tau\,\epsilon_0^i\,z$ for some integer $i \le k$. Since $x.\tau$ is unbounded in $\mathcal{S}_0$, so must be z. □

Claim B:

1. (b~2) is satisfied. For every objects x, y, z and every integer k, ℓ if $x\,\overline{\epsilon}^k\,y\,\overline{\epsilon}^\ell\,z$ then $x\,\overline{\epsilon}^{k+\ell}\,z$.
2. (b~3) is satisfied: For every objects x, y, z and every integer ℓ, if $x\,\epsilon\,y\,\epsilon^\ell\,z$ then $x\,\epsilon^{1+\ell}\,z$.
3. (b~4) is satisfied: For every objects x, y and every integer k, $x\,\overline{\epsilon}^k\,y\,\overline{\epsilon}^{-k}\,x \leftrightarrow x.ec(k) = y$.
4. (b~5) is satisfied: $\underline{O}.\epsilon \le \underline{r}$.
5. (b~6) is satisfied: $\underline{T} \subseteq \underline{O}.\ni$.
6. (b~7)(a) is satisfied: $x.\ni^{-i} \subseteq \{x\}.ec(i)$ for every $x \in \underline{T} \cup \underline{O}.\varepsilon\!\!\!\varepsilon$ and every natural i.
7. (b~7)(b) is satisfied: $x.\epsilon = x.\overline{\epsilon}$ for every $x \in (\underline{T} \cup \underline{O}.\varepsilon\!\!\!\varepsilon).ec^*$.
8. (b~8) is satisfied: If $x.\varepsilon\!\!\!\varepsilon = y$ then: (a) $\{x\} = y.\ni$, (b) $x.\epsilon^i = y.\epsilon^{i-1}$ for every $i \le 1$, (c) $(x,y) \notin (\overline{\epsilon})$.
9. (b~10) is satisfied: $\underline{O}.mli < \omega$.

Proof:

1. Assume $x\,\overline{\epsilon}^k\,y\,\overline{\epsilon}^\ell\,z$, $k,\ell \le 1$, $k+\ell \le 1$.
   - If all of x, y and z are new then $k, \ell \ge 0$ and $x\,\overline{\epsilon}^{k+\ell}\,z$ follows by ordering of ordinals.
   - If x, y are new and z is old such that $y.\tau = z$ then A4 applies.
   - If x, y are new and z is old such that $y.\tau \ne z$ then $k \ge 0$ and there is a $j \le \ell$ such that $y.\tau\,\overline{\epsilon}_0^j\,z$.

Consequently, $j \le k+\ell$ and $x.\tau\ \overline{\epsilon}^{j}\ z$, and therefore $x\ \overline{\epsilon}^{k+\ell}\ y$.
- If x is new and y and z old and $x.\tau = y = z$ then $k, \ell \ge 0$ and A3 applies.
- If x is new and y and z old and $x.\tau = y \ne z$ then $k \ge 0$ so that $\ell \le k+\ell$ and thus $x\ \epsilon^{k+\ell}\ z$ (using ℓ for i in (4)).
- If x is new and y and z old and $x.\tau \ne y$ then there is an $i \le k$ such that $x.\tau\ \overline{\epsilon}^{i}\ y\ \overline{\epsilon}^{\ell}\ z$. Consequently, $i+\ell \le k+\ell$ and $x.\tau\ \overline{\epsilon}^{i+\ell}\ z$, and therefore $x\ \overline{\epsilon}^{k+\ell}\ y$.
- If all of x, y and z are old then $x\ \overline{\epsilon}^{k+\ell}\ y$ follows by (b~2) in $\mathcal{S}_0$.

2. Apply claims A3 and A5.
3. Let x, y be objects and k an integer such that $x\ \overline{\epsilon}^{k}\ y\ \overline{\epsilon}^{-k}\ x$ or $x.ec(k) = y$. Since $\underline{O}_0.\epsilon^{*-*} = \underline{O}_0$ and $.ec = .ec_0$, it follows that either both x and y are old or both are new.
   - If both x and y are old then (b~4) in $\mathcal{S}_0$ applies.
   - If both x and y are new then necessarily $k = 0$ and the reflexivity and antisymmetry of $(\underline{\varpi}, \le)$ applies.
4. $\underline{O}.\epsilon \le \underline{r}$ since $x \le \underline{r}$ for every new object x and $\underline{T}_0.\ni = \emptyset$.
5. (b~6) is a consequence of: Every terminal object is old.
6. If $x \in \underline{T} \cup \underline{O}.\varepsilon\wp$ then x is necessarily an old object that is bounded in $\mathcal{S}_0$ so that claim A5 applies.
7. All objects from $(\underline{T} \cup \underline{O}.\varepsilon\wp).ec^*$ are old so that $\underline{O}_0.\epsilon^{*-*} = \underline{O}_0$ applies.
8. If $x.\varepsilon\wp = y$ then both x and y are old and bounded in $\mathcal{S}_0$. Consequently, apply the closedness of $\underline{O}_0.\ni$ w.r.t. $.\ni^{*-*}$, the closedness of $\underline{O}_0$ w.r.t. $.\epsilon^{*-*}$, and $\overline{\epsilon}^{i}$ being embedded into $\overline{\epsilon}^{i}$ for every integer i.
9. This follows from $x.mli = x.\tau.mli$ for every new object x (claim A2). □

Claim C:

1. For every old object x, $x.d = x.d_0$. (I.e. $\mathcal{S}$ preserves the rank of old objects.)
2. For every new object x, $x.d = x.mli + r_\epsilon(x) < \underline{\varpi}$ (and thus $r_\epsilon(x) = r_\epsilon(x)$).
3. Axiom (b~11) is satisfied: $x.\epsilon = x.\overline{\epsilon}$ for every x from $\underline{O} \setminus \underline{O}.\ni$.
4. Every non-well-founded primary object x is ϵ-ranked. (That is, $\mathcal{S}$ is rank pre-complete.)

Proof:

1. Let X be the set of all old objects that are well-founded in ϵ. Since X is closed w.r.t. w.r.t. $.\ni^{*-*}$ it follows that $x.d = x.d_0$ for every x from X. Objects from $\underline{O}_0 \setminus X$ stay non-well-founded in ϵ and have therefore rank $\underline{\varpi}$ both in $\mathcal{S}_0$ and $\mathcal{S}$.
2. Denote $N = \underline{O}.\tau(-1)$ the set of new objects and proceed by well-founded induction on (N, ϵ). Let x be from N. Since $N.\ni^{-k}$ is empty for every $k > 0$ and $x.\ni^{*}.mli = \{x\}.mli$ it follows by definition of $.d$ that
   $$x.d = \underline{\varpi} \wedge (\sup\{a.d + 1 \mid a \in x\} \vee (x.mli + \sup\{i \mid a\ \epsilon^{i}\ x,\ i \in \mathbb{N}\})).$$
   If $x.\ni = \emptyset$ (i.e. $r_\epsilon(x) = 0$) then $a\ \epsilon^{i}\ x \leftrightarrow i = 0$ so that $x.d = \underline{\varpi} \wedge (x.mli + 0) = x.mli$. Assume further that $r_\epsilon(x) > 0$. By induction assumption,
   $$\sup\{a.d + 1 \mid a \in x\} \;=\; \sup\{x.mli + r_\epsilon(a) + 1 \mid a \in x\} \;=\; x.mli + r_\epsilon(x).$$
   Since $r_\epsilon(x) \ge \sup\{i \mid a\ \epsilon^{i}\ x,\ i \in \mathbb{N}\}$ it follows that $x.d = \underline{\varpi} \wedge (x.mli + r_\epsilon(x))$. Finally, $r_\epsilon(x) < \underline{\varpi}$ since by definition of rank pre-completion, $(X, \epsilon) \simeq (\underline{\varpi}, <)$ where $X = \{x\}.\tau.\tau(-1)$.
3. This follows by the closedness of $\underline{O}_0$ w.r.t. $.\epsilon^*$.
4. Let x be a non-well-founded primary object and denote $X = x.\tau(-1)$. It follows that $(X, \epsilon) = (X, \epsilon) \simeq (\underline{\varpi}, <)$ and thus $r_\epsilon(X) = \underline{\varpi}$. Since $X \subseteq x.\ni$ the statement follows. □

ϵ-structure

In this section we develop a formal language for families of structures based on a single relation of membership on a set.

ϵ-structure

By an ϵ-*structure* we mean a structure $(\underline{O}, \epsilon)$ where

- $\underline{O}$ is a set of *objects*, and
- ϵ is the *membership* relation between objects.

There are no additional constraints for $(\underline{O}, \epsilon)$. Let $r_\epsilon()$ be the $\underline{\varpi}$-limited rank function $\underline{O} \to \underline{\varpi}+1$, i.e. $r_\epsilon(x) = \underline{\varpi}$ for every object x that is non-well-founded in ϵ, and

- $r_\epsilon(x) = \underline{\varpi} \wedge sup\ \{r_\epsilon(a) + 1 \mid a \epsilon x\}$ if x is well-founded in ϵ.

An object x is *bounded* if $r_\epsilon(x) < \underline{\varpi}$, otherwise x is *unbounded*. Similarly, a set $Y \subseteq \underline{O}$ is *bounded* (resp. *unbounded*) if $sup\ \{ r_\epsilon(x) \mid x \in Y\}$ is less (resp. equal to) $\underline{\varpi}$.

The following derived relations $\leq$, ϵ, ϵ^0 and $\overline{\epsilon}$ between objects are distinguished. Like in ϵ5-structures, we use the symbols $.\epsilon/.\ni$ and $.\mathrm{I}/.\mathrm{I}$ for the respective image/preimage operators of ϵ and $\leq$. Similarly for ϵ, ϵ^0 and $\overline{\epsilon}$.

- $\leq$ (the *inheritance* relation) is a pre-order on $\underline{O}$ defined by
  $x \leq y \quad \leftrightarrow \quad x = y$ or $\emptyset \neq x.\ni \subseteq y.\ni$.
- ϵ (the *bounded membership*) is the domain-restriction of ϵ to bounded objects, i.e.
  $x \epsilon y \quad \leftrightarrow \quad x \epsilon y$ and $r_\epsilon(x) < \underline{\varpi}$.
- ϵ^0 is a transitive relation defined as the domain-restriction of $\leq$ to bounded objects, i.e.
  $x \epsilon^0 y \quad \leftrightarrow \quad x \leq y$ and $r_\epsilon(x) < \underline{\varpi}$.
- $\overline{\epsilon}$ (the *power membership*) is a subrelation of ϵ defined by
  $x \overline{\epsilon} y \quad \leftrightarrow \quad x.\mathrm{I} \subseteq y.\ni$.

Observations:

1. ϵ is a well-founded relation of rank at most $\underline{\varpi}+1$.
2. For every objects x and y the following are satisfied:
   a. $x \leq y \quad \to \quad r_\epsilon(x) \leq r_\epsilon(y)$.
   b. $x \epsilon y \quad \to \quad r_\epsilon(x) < r_\epsilon(y)$.
   c. $x.\mathrm{I} = y.\ni \quad \to \quad \{x\} = y.\ni$ or $\emptyset \neq x.\ni = y.\ni.\ni \quad \to \quad r_\epsilon(x) + 1 = r_\epsilon(y)$.
3.
   a. The set of all bounded objects is closed w.r.t. $.\ni$ and $.\mathrm{I}$.
   b. The set of all unbounded objects is closed w.r.t. $.\epsilon$ and $.\mathrm{I}$.
4. $(\epsilon) \circledcirc (\leq) = (\epsilon)$ and $(\epsilon) \circledcirc (\leq) = (\epsilon)$.

ϵ-rank

In an ϵ-structure $\mathcal{S} = (\underline{O}, \epsilon)$ we let $r_\epsilon(x)$ denote the ϵ-rank of an object x, i.e.

- $r_\epsilon(x) = sup\ \{r_\epsilon(a) + 1 \mid a \epsilon x\}$.

We say than a object x is ϵ-*ranked* if $r_\epsilon(x) = r_\epsilon(x)$. The structure $\mathcal{S}$ is ϵ-ranked if $r_\epsilon(x) = r_\epsilon(x)$ for every object x.

Observations:

A. For every object x, the following holds.
   1. $r_\epsilon(x) \leq r_\epsilon(x)$.
   2. $r_\epsilon(x) < \underline{\varpi} \quad \to \quad r_\epsilon(x) = r_\epsilon(x)$. (That is, every bounded object is ϵ-ranked.)
   3. $r_\epsilon(x) = \underline{\varpi} \quad \leftrightarrow \quad x.\ni$ is unbounded.
   4. $r_\epsilon(x) = \underline{\varpi} \quad \leftrightarrow \quad x.\ni$ is unbounded.

B. If (•) is assumed then (i)–(iii) hold:
   - For every object x, $x \in \underline{O}.\ni \leftrightarrow r_\epsilon(x) < \underline{\varpi}$. (That is, $\underline{O}.\ni$ equals the set of objects with bounded ϵ-rank.)

   i. For every object x, $x \in \underline{O}.\ni \leftrightarrow r_\epsilon(x) < \underline{\varpi}$. (That is, $\underline{O}.\ni$ equals the set of bounded objects.)
   ii. $\mathcal{S}$ is ϵ-ranked.
   iii. $\underline{O}.\epsilon = \underline{O}.\epsilon$.

Proof:

B. Note first that in both (•) and (i) we can replace "↔" by "←" since the "→" direction is satisfied implicitly. Assume that (•) is satisfied.

i. If x is such that $r_\epsilon(x) < \underline{\varpi}$ then $r_\epsilon(x) = r_\epsilon(x)$ by the above observations so that $x \in \underline{O}.\ni$.

ii. By (i), $r_\epsilon(x) < \underline{\varpi} \leftrightarrow r_\epsilon(x) < \underline{\varpi}$, that is, $r_\epsilon(x) = \underline{\varpi} \leftrightarrow r_\epsilon(x) = \underline{\varpi}$. We therefore obtain

- $r_\epsilon(x) < \underline{\varpi} \;\rightarrow\; r_\epsilon(x) = r_\epsilon(x)$ (by observation A2),
- $r_\epsilon(x) = \underline{\varpi} \;\rightarrow\; r_\epsilon(x) = r_\epsilon(x)$ (by the above equivalence).

We conclude that $r_\epsilon()$ and $r_\epsilon()$ coincide. □

ϵ-structure

As a counterpart to $\in$-structures we develop a language of ϵ-structures. We start with the "ϵ" symbol which stands for an (intentionally) well-founded membership.

ϵ-structure

By an ϵ-structure we mean a structure $(\underline{O}, \epsilon)$ where

- $\underline{O}$ is the set of *objects*, and
- ϵ is the *bounded membership* between objects.

The derived relations $\leq$, ϵ^0, $\overline{\in}$ and $\in$ between objects are defined according to the table to the right. The terminology for these relations is the same as in $\in$-structures. Moreover, the i-th power of $\in$, $\overline{\in}$ and ϵ for a positive natural i is defined in the usual sense of relational composition. The 0-th power of $\in$ or $\overline{\in}$ equals $\leq$.

$x \leq y$	↔	$x = y$ or $\emptyset \neq x.\ni \subseteq y.\ni$
$x\ \epsilon^0\ y$	↔	$x \leq y$ and $x \in \underline{O}.\ni$
$x\ \overline{\in}\ y$	↔	$x.\ni^0 \subseteq y.\ni$
$x \in y$	↔	$x\ \epsilon\ y$ or $x\ \overline{\in}\ y$

Observations:

1. Like in $\in$-structures, (a) $\leq$ is a pre-order, (b) ϵ^0 is transitive, (c) $(\epsilon) \circledcirc (\leq) = (\epsilon)$, (d) $(\in) \circledcirc (\leq) = (\in)$.
2. ϵ equals the domain restriction of $\in$ to $\underline{O}.\ni$.
3. $\underline{O}.\epsilon = \underline{O}.\in$.

Proof:

2. We should prove that for every objects x, y, $x\ \epsilon\ y \;\leftrightarrow\; x \in y$ and $x \in \underline{O}.\ni$. The "→" direction follows by $(\epsilon) \subseteq (\in)$. To show "←", assume $x \in y$ and $x \in \underline{O}.\ni$.
   - If $x\ \overline{\in}\ y$ then, by definition of $\overline{\in}$ and ϵ^0, $x \in x.\ni^0 \subseteq y.\ni$ and thus $x\ \epsilon\ y$.
   - Otherwise, if $(x,y) \notin (\overline{\in})$, then $x\ \epsilon\ y$ follows directly by definition of $\in$. □

Proposition:

A. For every objects x, y the following holds:

1. $x.\ni \subseteq y.\ni \;\rightarrow\; x.\overline{\ni} \subseteq y.\overline{\ni}$.
2. $x.\ni \subseteq y.\ni \;\leftrightarrow\; x.\ni \subseteq y.\ni$.
3. $x \leq y \;\leftrightarrow\; x = y$ or $\emptyset \neq x.\ni \subseteq y.\ni$.

B. Assume (a) $(\epsilon) = (\in) \circledcirc (\epsilon^0)$ and (b) $\underline{O} = \underline{O}.\epsilon \cup \underline{O}.\ni$. Then for every objects x, y the following holds:

1. $x.\ni = \emptyset \;\rightarrow\; x.\downarrow = x.\ni^0 = \{x\}$.
2. $\{x\} = y.\ni \;\rightarrow\; y.\downarrow = y.\ni^0 \supseteq \{y\}$. (If antisymmetry of $\leq$ is asserted then "$\supseteq$" can be replaced by "$=$".)
3. $x.\ni^0$ is non-empty.
4. $x \leq y \;\leftrightarrow\; x.\ni^0 \subseteq y.\ni^0$.
5. $x.\downarrow \subseteq y.\ni \;\leftrightarrow\; x.\ni^0 \subseteq y.\ni$ ($\leftrightarrow x\ \overline{\in}\ y$ by definition of $\overline{\in}$).
6. $x.\downarrow = y.\ni \;\leftrightarrow\; x.\ni^0 = y.\ni$.
7. $x.\downarrow = y.\ni \;\rightarrow\; x.\overline{\in} = y.\uparrow$.
8. $x.\downarrow = y.\ni \;\leftrightarrow\; x.\overline{\in} = y.\uparrow$ assuming $x.\downarrow = z.\ni$ for some object z.

Proof:

A.

1. Assume $x.\ni \subseteq y.\ni$. Then for every object u, $u\ \overline{\in}\ x \leftrightarrow u.\ni^0 \subseteq x.\ni \rightarrow u.\ni^0 \subseteq y.\ni \leftrightarrow u\ \overline{\in}\ y$.
2. The "←" direction follows by ϵ being a domain-restriction of $\in$, "→" follows from A1.
3. Apply the previous statement and the $\underline{O}.\in = \underline{O}.\epsilon$ equality.

B.

1. Let x be such that $x.\ni = \emptyset$. Then $x.\downarrow = \{x\}$ by definition of $\leq$. By definition of ϵ^0, $x.\ni^0 = x.\downarrow \cap \underline{O}.\ni$. Since $x \in \underline{O}.\ni$ by (b), the equality $x.\ni^0 = \{x\}$ follows.
2. Apply condition (a).
3. For $x.\ni = \emptyset$ apply B1. Otherwise, apply condition (a): $a \epsilon x \to a \epsilon b \epsilon^0 x$ for some b.
4. If $x \leq y$ then $x.\downarrow \subseteq y.\downarrow$. Since $z.\ni^0 = z.\downarrow \cap \underline{O}.\ni$ for every object z, the inclusion $x.\ni^0 \subseteq y.\ni^0$ follows. Conversely, assume $x.\ni^0 \subseteq y.\ni^0$.
   - If $x.\ni = \emptyset$ then $\{x\} = x.\ni^0$ and thus $x \epsilon^0 y$, in particular $x \leq y$.
   - If $x.\ni \neq \emptyset$ then apply (a): $x.\ni^0 \subseteq y.\ni^0 \;\to\; x.\ni^0.\ni \subseteq y.\ni^0.\ni \;\to\; x.\ni \subseteq y.\ni \;\to\; x \leq y$.
5. The "→" direction follows by ϵ^0 and ϵ being the domain-restriction of $\leq$ and ϵ, respectively, to $\underline{O}.\ni$. To show "←", assume $x.\ni^0 \subseteq y.\ni$, i.e. $x \overline{\epsilon} y$. Then for every object u,
   - $u \leq x \;\to\; u.\ni^0 \subseteq x.\ni^0 \subseteq y.\ni \;\to\; u \overline{\epsilon} y \;\to\; u \epsilon y$. (The first implication uses (a).)

   This shows $x.\downarrow \subseteq y.\ni$.
6. The "→" direction follows by the same argument as with the previous statement. To show "←", assume $x.\ni^0 = y.\ni$. Let u be an object from $y.\ni$. Then
   - $u \overline{\epsilon} y \;\leftrightarrow\; u.\ni^0 \subseteq y.\ni \;\to\; u.\ni^0 \subseteq x.\ni^0 \;\leftrightarrow\; u \leq x$,
   - $(u,y) \notin (\overline{\epsilon}) \;\to\; u \epsilon y \;\to\; u \in x.\ni^0 \;\to\; u \leq x$.

   This shows $x.\downarrow \supseteq y.\ni$. The converse inclusion is shown like in the previous statement.
7. Assume $x.\downarrow = y.\ni$. (In particular $y.\ni \neq \emptyset$.) Then for every object u,
   - $x \overline{\epsilon} u \;\leftrightarrow\; x.\downarrow \subseteq u.\ni \;\leftrightarrow\; y.\ni \subseteq u.\ni \;\leftrightarrow\; y \leq u$. (The last equivalence is due A3.)

   This shows $x.\overline{\epsilon} = y.\uparrow$.
8. Assume $x.\downarrow = z.\ni$ and $x.\overline{\epsilon} = y.\uparrow$. Using the previous statement we obtain
   - $y.\uparrow = z.\uparrow \;\to\; y \leq z \leq y \;\to\; y.\ni = z.\ni$. □

ϵ-ϵ-structure

By an ϵ-ϵ-structure we mean an ϵ-structure $(\underline{O}, \epsilon)$ satisfying the following conditions:

(ϵ-ϵ~1) ϵ is well-founded.

(ϵ-ϵ~2) $\underline{O}.\ni$ equals the set of objects whose ϵ-rank is strictly less than ϖ. (In particular, $\underline{O} = \underline{O}.\epsilon \cup \underline{O}.\ni$.)

(ϵ-ϵ~3) $(\epsilon) = (\epsilon) \circledast (\epsilon^0)$.

(ϵ-ϵ~4) $(\epsilon) = (\epsilon) \cup (\overline{\epsilon})$. (Bounding monotonicity)

(ϵ-ϵ~5) For every objects x, y, $x.\ni \subseteq y.\ni \;\to\; x.\ni \subseteq y.\ni$. (Extensional consistency)

(ϵ-ϵ~6) For every objects x, y, $x.\ni^0 \subseteq y.\ni \;\to\; x.\downarrow \subseteq y.\ni$. (Power-extensional consistency)

The horizontal line indicates that conditions (ϵ-ϵ~4)–(ϵ-ϵ~6) are redundant. They are used for further reference.

Correspondence of ϵ-structures and ϵ-structures

Proposition: Let $\mathcal{S} = (\underline{O}, \epsilon, \leq, \epsilon, \epsilon^0, \overline{\epsilon})$ be a structure of 5 relations on a set $\underline{O}$ of objects satisfying (ϵ-ϵ~1)–(ϵ-ϵ~6). Then the following are equivalent:

i. $\mathcal{S}$ is a definitional extension of an ϵ-structure. (In this case, (ϵ-ϵ~1) is redundant.)
ii. $\mathcal{S}$ is a definitional extension of an ϵ-structure. (That is, $\mathcal{S}$ is an ϵ-ϵ-structure.)

That is, assuming (ϵ-ϵ~1)–(ϵ-ϵ~6), conditions (i) and (ii) in the following table are equivalent:

Relation	(i) Definition in ϵ-structure		(ii) Definition in ϵ-structure
ϵ	$x \epsilon y$ and $r_\epsilon(x) < \varpi$	$\leftrightarrow$	$x \epsilon y$
$\leq$	$x = y$ or $\emptyset \neq x.\ni \subseteq y.\ni$	$\leftrightarrow$	$x = y$ or $\emptyset \neq x.\ni \subseteq y.\ni$
ϵ^0	$x \leq y$ and $r_\epsilon(x) < \varpi$	$\leftrightarrow$	$x \leq y$ and $x \in \underline{O}.\ni$
$\overline{\epsilon}$	$x.\downarrow \subseteq y.\ni$	$\leftrightarrow$	$x.\ni^0 \subseteq y.\ni$
ϵ	$x \epsilon y$	$\leftrightarrow$	$x \epsilon y$ or $x \overline{\epsilon} y$

Proof:

i→ii. Assume that $(\underline{O}, \epsilon)$ is an ϵ-structure in which (ϵ-ϵ~1)–(ϵ-ϵ~6) are satisfied. Observe first that (ϵ-ϵ~2) has already been considered for ϵ-structures as B(•). As a particular consequence of this condition,

for every object x, (α) $\emptyset \neq x.\ni \leftrightarrow \emptyset \neq x.\ni$, (β) $r_\epsilon(x) < \underline{\varpi} \leftrightarrow x \in \underline{O}.\ni$.

Using this, we can check the equivalences for the 5 relations. For ϵ there is nothing to check. For ϵ^0, apply (β). For ϵ, use (ϵ-ϵ~4).

$\leq$: Using (α), the equivalence for $\leq$ can be expressed as: $x.\ni \subseteq y.\ni \leftrightarrow x.\ni \subseteq y.\ni$. The "→" direction follows by ϵ being a domain-restriction of ϵ. The opposite direction is asserted by (ϵ-ϵ~5).

$\overline{\epsilon}$: In the equivalence for $\overline{\epsilon}$, the "→" direction follows by ϵ^0 and ϵ being domain-restrictions of $\leq$ and ϵ, respectively. The opposite direction is asserted by (ϵ-ϵ~6).

i←ii. Assume that $(\underline{O}, \epsilon)$ is an ϵ-ϵ-structure. Let $r_\epsilon()$ be the ϵ-rank function so that (ϵ-ϵ~2) can be expressed as

$r_\epsilon(x) < \underline{\varpi} \leftrightarrow x \in \underline{O}.\ni$.

Since ϵ is a domain-restriction of ϵ to $\underline{O}.\ni$ (see observation 2) it follows that $(\underline{O}.\ni, \epsilon)$ coincides with $(\underline{O}.\ni, \epsilon)$. Recall that the $.d$ function is by definition the $\underline{\varpi}$-limited rank w.r.t. ϵ. We therefore obtain

- $x \in \underline{O}.\ni \;\rightarrow\; r_\epsilon(x) = r_\epsilon(x) < \underline{\varpi}$ (since $r_\epsilon(x) < \underline{\varpi}$ and $(\underline{O}.\ni, \epsilon) = (\underline{O}.\ni, \epsilon)$),
- $x \notin \underline{O}.\ni \;\rightarrow\; r_\epsilon(x) = r_\epsilon(x) = \underline{\varpi}$ (since $r_\epsilon(x) = \underline{\varpi}$ and $r_\epsilon(x) \leq r_\epsilon(x)$).

As a consequence,

(•) $r_\epsilon(x) < \underline{\varpi} \leftrightarrow x \in \underline{O}.\ni$.

Using this, we can check the equivalences for the 5 relations. (ϵ): Apply (•) and the fact that ϵ is a domain-restriction of ϵ to $\underline{O}.\ni$. ($\leq$): Apply Proposition A3. (ϵ^0): Apply (•). ($\overline{\epsilon}$): Apply Proposition B5. (ϵ): There is nothing to check. □

Disallowed structures

The following diagrams show examples of ϵ-structures that are disallowed by (ϵ-ϵ~4)–(ϵ-ϵ~6). Each example violates just the indicated condition. As usual, ϵ equals the composition $(\rightarrow) \circledcirc (\leq)$ where $\rightarrow$ is the (exact) relation indicated by blue arrows, and $\leq$ is indicated by green arrows (with possibly implicit arrow heads on the higher ends) in its reflexive transitive reduction.

(i)	(ii)	(iii)
¬(ϵ-ϵ~4):	¬(ϵ-ϵ~5):	¬(ϵ-ϵ~6):
$(a,b) \in (\epsilon) \setminus ((\epsilon) \cup (\overline{\epsilon}))$	$a.\ni = b.\ni$ and $a.\ni \neq b.\ni$	$a.\ni^0 \subseteq b.\ni$ and $(a,b) \notin (\epsilon)$

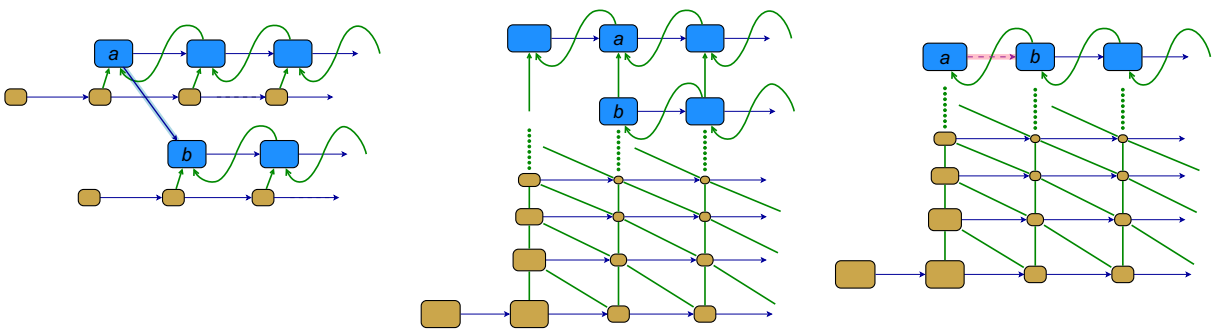

It is assumed that $\underline{\varpi} = \omega$. Bounded objects are shown in beige color, the unbounded objects are in blue.

Bounded ϵ-ϵ-structures

In contrast to basic structures, ϵ-ϵ-structures need not have unbounded objects. (Even an empty structure is allowed.) Moreover, the following observation can be made:

Observation: For every ϵ-ϵ-structure $(\underline{O}, \epsilon)$, the restriction $(\underline{O}.\ni, \epsilon)$ is an ϵ-ϵ-structure (in which every object is bounded).

Pre-complete structure of $\in$

In this section we introduce a subfamily of basic structures that is closed w.r.t. hitherto described completion constructions. As a particular consequence, the structures appear as a (definitional extension of a) subfamily of ϵ-$\in$-structures.

Pre-complete structure of $\in$

We say that an $\in 5$-structure $\mathcal{S}$ is *pre-complete* if it is a basic structure such that the following are satisfied.

(A) $\mathcal{S}$ is extensionally consistent: For every objects x, y, $x \leq y \leftrightarrow x = y$ or $\emptyset \neq x.\ni \subseteq y.\ni$.

(B) $\mathcal{S}$ is metaobject complete: (a) $\mathcal{S}$ is powerclass complete and (b) $\mathcal{S}$ is singleton complete.

(C) $\mathcal{S}$ is powerclass consistent: For every object x, x is powerclass-like $\rightarrow$ x is a powerclass.

(D) $\mathcal{S}$ is ϵ-ranked: For every object x, $r_\epsilon(x)$ (the ϵ-rank of x) equals $x.d$.

Similarly, a metaobject structure is *pre-complete* if its correspondent basic structure is pre-complete.

Note: In case $\varpi = \omega$ the (D) condition is redundant.

Proposition: A pre-complete $\in 5$-structure $\mathcal{S} = (\underline{O}, \in, \overline{\in}^{(*)}, \underline{r}, .ec, .\varepsilon c)$ is uniquely given by $\in$ or by ϵ according to the following table. Moreover, $\mathcal{S}$ is an ϵ-$\in$-structure.

Relation (subset)	(i) Derived from $\in$		(ii) Derived from ϵ
ϵ	$x \in y$ and $r_\epsilon(x) < \varpi$	$\leftrightarrow$	$x \epsilon y$
$\leq$	$x = y$ or $\emptyset \neq x.\ni \subseteq y.\ni$	$\leftrightarrow$	$x = y$ or $\emptyset \neq x.\ni \subseteq y.\ni$
ϵ^0	$x \leq y$ and $r_\epsilon(x) < \varpi$	$\leftrightarrow$	$x \leq y$ and $x \in \underline{O}.\ni$
$\overline{\in}$	$x.\mathrm{I} \subseteq y.\ni$	$\leftrightarrow$	$x.\ni^0 \subseteq y.\ni$
$\in$	$x \in y$	$\leftrightarrow$	$x \epsilon y$ or $x \overline{\in} y$
$.ec$	$x.\mathrm{I} = y.\ni$	$\leftrightarrow$	$x.\ni^0 = y.\ni$
$.\varepsilon c$	$\{x\} = y.\ni$	$\leftrightarrow$	$\{x\} = y.\ni$
$\underline{r}.\mathrm{I} =$	$\underline{O}.\epsilon$	$=$	$\underline{O}.\epsilon$

Proof: Let $\mathcal{S} = (\underline{O}, \in, \ldots)$ be a pre-complete structure. Make the following observations:

a. $\underline{O} = \underline{O}.\epsilon \cup \underline{O}.\ni$ (since $x \leq \underline{r}$ for every non-terminal object x and (A) applies).

b. $(\epsilon) = (\in) \circledast (\epsilon^0)$ (since $\mathcal{S}$ is singleton-complete so that $(\epsilon) = (.\varepsilon c) \circledast (\epsilon^0)$).

c. $\underline{O}.\epsilon^0 = \underline{O}$ (by the previous two equalities).

d. $\underline{O}.\ni$ equals the set of objects with bounded ϵ-rank (since $\mathcal{S}$ is ϵ-ranked and $\underline{O}.\ni = \underline{r}.\ni$).

For every objects x, y, the following holds:

e. $x.\ni \subseteq y.\ni \leftrightarrow x.\ni \subseteq y.\ni$ (since $\mathcal{S}$ is extensionally consistent).

f. $x.\mathrm{I} = y.\ni \leftrightarrow x.\ni^0 = y.\ni$.

- The "$\rightarrow$" direction is by definition. For the opposite direction, use powerclass completeness. Assume $x.\ni^0 = y.\ni$. Since $x.ec$ exists we have $y.\ni = x.ec.\ni$. Since $x.\ni^0$ is non-empty it follows that $x.ec = y$.

g. $x.\mathrm{I} \subseteq y.\ni \leftrightarrow x.\ni^0 \subseteq y.\ni$.

- This follows from $(\overline{\in}) = (.ec) \circledast (\leq)$: $x.\mathrm{I} \subseteq y.\ni \leftrightarrow x.ec.\ni \subseteq y.\ni \leftrightarrow x.ec.\ni \subseteq y.\ni \leftrightarrow x.\ni^0 \subseteq y.\ni$.

This shows the determination of $\mathcal{S}$ via $\in$ or ϵ as well as that conditions (ϵ-$\in$~1)–(ϵ-$\in$~6) are satisfied. □

We have proved that the family of pre-complete $\in 5$-structures is definitionally equivalent to a family of ϵ-structures. The next subsection provides the corresponding axiomatization via ϵ and the definitional extension of ϵ-structures. The last axiom refers to powerclass consistency which we let be defined in ϵ-structures the same way as in $\in 5$-structures.

Pre-complete structure via ϵ

We say that an ϵ-structure $(\underline{O}, \epsilon)$ is *pre-complete* if the following are satisfied:

(ep~1) ϵ is well-founded.

(ep~2) ϵ is *weakly extensional*: for every x, y from $\underline{O}.\epsilon$, if $x.\ni = y.\ni$ then $x = y$.

(ep~3) $\underline{O}.\ni$ is the set of all objects x with bounded ϵ-rank: $x \in \underline{O}.\ni \leftrightarrow r_\epsilon(x) < \underline{\varpi}$.

(ep~4) $\underline{O}.\ni = \underline{r}.\ni$ for some (necessarily unique) object $\underline{r}$.

(ep~5) For every object x, there is an object y ($= x.ec$) such that $x.\ni^0 = y.\ni$.

(ep~6) For every object $x \in \underline{O}.\ni$, there is an object y ($= x.\varepsilon c$) such that $\{x\} = y.\ni$.

(ep~7) For every object x, if x is powerclass-like then x is a powerclass.

Observations:

1. A pre-complete ϵ-structure is an ϵ-ϵ-structure. (The $(\epsilon) = (\epsilon) \circledcirc (\epsilon^0)$ equality is follows by (ep~6).)
2. The induced ϵ-structure of a pre-complete ϵ5-structure is pre-complete.

Proposition:
Let $\mathcal{S}_a = (\underline{O}, \epsilon)$ be a pre-complete ϵ-structure and let $\mathcal{S}_b = (\underline{O}, \leq, \underline{r}, .ec, .\varepsilon c)$ be a structure definitionally derived from $\mathcal{S}_a$ according to the table on the right. Then $\mathcal{S}_b$ is a metaobject structure that is pre-complete.

$x \leq y$	$\leftrightarrow$	$x = y$ or $\emptyset \neq x.\ni \subseteq y.\ni$
$\underline{r}.\ni$	$=$	$\underline{O}.\ni$
$x.ec = y$	$\leftrightarrow$	$x.\ni^0 = y.\ni$
$x.\varepsilon c = y$	$\leftrightarrow$	$\{x\} = y.\ni$
$x\ \epsilon^0\ y$	$\leftrightarrow$	$x \leq y$ and $x \in \underline{O}.\ni$
$x\ \overline{\epsilon}\ y$	$\leftrightarrow$	$x.\ni^0 \subseteq y.\ni$
$x\ \epsilon\ y$	$\leftrightarrow$	$x\ \epsilon\ y$ or $x\ \overline{\epsilon}\ y$

Proof:
Assume that $\mathcal{S}_a$ and $\mathcal{S}_b$ are as in the antecedent of the proposition. Note first that in $\mathcal{S}_a$ (due (ep~6)),

$$(\epsilon) = (.\varepsilon c) \circledcirc (\leq),$$

which is exactly how ϵ is derived in $\mathcal{S}_b$ – thus "ϵ" is disambiguated. Observe also that since $\underline{r}.\ni \neq \emptyset$, we have $x \leq \underline{r} \leftrightarrow x.\ni \neq \emptyset$ so that $\underline{T} = \underline{O} \setminus \underline{O}.\epsilon$. Subsequently, we verify that $\mathcal{S}_b$ satisfies the properties of a grounded metaobject structure:

1. (mo~1): Inheritance, $\leq$, is a partial order.
2. (mo~2): $x \leq y \leftrightarrow x.ec \leq y.ec$ for every objects x, y.
3. (mo~3): Objects from $\underline{T}.ec^*$ are minimal in $\leq$.
4. (mo~4): For every object x, $x.ec \leq \underline{r}$.
5. (mo~5)': $\underline{T}.\epsilon^* = \underline{O}$.
6. (mo~6): The singleton map, $.\varepsilon c$, is injective.
7. (mo~7): Objects from $\underline{O}.\varepsilon c.ec^*$ are minimal in $\leq$.
8. (mo~8): $x \leq y \leftrightarrow x.\varepsilon c \leq y.ec$ for every objects x, y such that $x.\varepsilon c$ is defined.
9. (mo~9)': For every object x, $x.\varepsilon c$ is defined $\leftrightarrow$ $r_\epsilon(x) < \underline{\varpi}$.

(1). $\leq$ is a preorder by definition. The antisymmetry of $\leq$ is asserted by (ep~2). (2). Apply proposition A3: $x \leq y \leftrightarrow x.\ni^0 \subseteq y.\ni^0$. (3). Apply propositions B1 and B2. (4). Apply $x.\ni^0 \neq \emptyset$ (proposition B3). (5). Apply well-foundedness of ϵ. (6). Injectivity of $.\varepsilon c$ follows by definition. (7). Apply proposition B2. (8). By (ep~3) and (ep~6), $x.\varepsilon c$ is defined iff $x \in \underline{O}.\ni$. Therefore, if $x.\varepsilon c$ is defined then $x.\varepsilon c \leq y.ec \leftrightarrow x.\varepsilon c.\ni \subseteq y.ec.\ni \leftrightarrow \{x\} \subseteq y.ec.\ni \leftrightarrow x\ \epsilon\ y.ec \leftrightarrow x \leq y$. (9). Apply $x \in \underline{O}.\ni \leftrightarrow r_\epsilon(x) < \underline{\varpi}$ which holds in ϵ-ϵ-structures.

Finally, being a definitional extension of an ϵ-ϵ-structure, $\mathcal{S}_b$ is ϵ-ranked. The powerclass consistency condition is explicitly asserted by (ep~7). □

Alternative formulation of (ep~7)

Proposition: Assume that $\mathcal{S} = (\underline{O}, \epsilon)$ is an ϵ-structure satisfying (ep~1)—(ep~6) (that is, $\mathcal{S}$ is pre-complete "up to (ep~7)"). Let x be an object such that x is a powerclass-like. Then for every object u the following are equivalent:

i. $u.\mathrm{I} = x.\ni$ ($\leftrightarrow x.\ni$ is a principal ideal $\leftrightarrow u.ec = x \leftrightarrow u.\ni^0 = x.\ni \leftrightarrow x$ is a powerclass).
ii. $u.\ni = x.\ni.\ni \neq \emptyset$ or $\{u\} = x.\ni$.

Note: By (ep~2), u in (ii) is unique whenever $x.\ni.\ni$ is non-empty, that is, whenever $x \notin \underline{T}.ec$.

Proof:
(i)→(ii). If $u.\mathrm{I} = x.\ni$ then $u.\ni = u.\mathrm{I}.\ni = x.\ni.\ni = x.\ni.\ni$. If in addition $u.\epsilon = \varnothing$, that is, $x \in \underline{T}$, then $\{u\} = \{x\}.c\varepsilon = \{x\}.ce = x.\ni$. To prove (i)←(ii), assume that x is an object such that x is powerclass-like, that is,

$$(*)\quad \begin{array}{l} x.\ni = x.\overline{\ni} \text{ and} \\ \text{for every } X \subseteq x.\ni \text{ such that the } \epsilon\text{-rank of } X \text{ is bounded, there is an object } y \text{ such that } X \leq y \in x.\ni. \end{array}$$

Now let u be an object satisfying (ii). If $\{u\} = x.\ni$ then $u.\mathrm{I} = \{u\} = x.\ni = x.\ni$. Assume that $u.\ni = x.\ni.\ni \neq \varnothing$. We prove that $u.\ni^0 = x.\ni$. The $\supseteq$ inclusion is immediate. To prove $u.\ni^0 \subseteq x.\ni$, let a be from $u.\ni^0$, (that is, $a \in u.\mathrm{I} \cap \underline{O}.\ni$) and denote $X = a.\ni.\varepsilon c$ the singleton image of $a.\ni$. Make the following observations about X:

1. The ϵ-rank of X equals $a.d + 1$ and is therefore bounded.
2. $X \subseteq x.\ni$.
3. $a = \bigvee X$, that is, a is the least upper bound of X, in particular, $a \leq X.\triangle$.

Now apply condition $(*)$ to X: there is an y from $X.\triangle \cap x.\ni$. Since $a \leq y \in x.\ni = x.\overline{\ni}$, it follows that $a \epsilon x$ and therefore $a \epsilon x$. This proves $u.\ni^0 \subseteq x.\ni$. □

Corollary:

1. Axiom (ep~7)' can be equivalently replaced by

   (ep~7)' For every object x, if x is powerclass-like then $x.\ni.\ni = u.\ni$ for some object u.

The pre-completion theorem

Proposition: Every basic structure $\mathcal{S}_0$ has a faithful extension $\mathcal{S}$ that is pre-complete. Such an extension can be obtained in the following steps:

1. Let $\mathcal{S}_1$ be the rank pre-completion of $\mathcal{S}_0$. (Put $\mathcal{S}_1 = \mathcal{S}_0$ if $\underline{\varpi} = \omega$.)
2. Let $\mathcal{S}_2$ be the metaobject completion of $\mathcal{S}_1$.
3. Let $\mathcal{S} = \mathcal{S}_3$ be the extensional pre-completion of $\mathcal{S}_2$.

Proof: In each step, $\mathcal{S}_{i+1}$ is a basic structure that is a faithful extension of $\mathcal{S}_i$ therefore $\mathcal{S}$ is a basic structure that is a faithful extension of $\mathcal{S}_0$. By the extensional pre-completion theorem, $\mathcal{S}$ is metaobject complete, extensionally consistent and powerclass consistent. Since $\mathcal{S}_1$ is rank pre-complete so is $\mathcal{S}$. By the observations about rank pre-complete structures, $\mathcal{S}$ is ϵ-ranked and thus pre-complete. □

Pre-completion

If $\mathcal{S}$ is obtained from $\mathcal{S}_0$ as in the pre-completion theorem above, we call it the *pre-completion* of $\mathcal{S}_0$.

(a)
$\mathcal{S}_0$

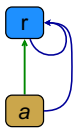

The following diagrams shows a pre-completion of a basic structure $\mathcal{S}_0$ that contains two objects, $\underline{O}_0 = \{\underline{r}, \underline{a}\}$. It is assumed that $\underline{\varpi} = \omega$ so that rank-precompletion is skipped. Instead, metaobject completion is shown in 2 steps.

(b)
$\mathcal{S}_1$ … powerclass completion of $\mathcal{S}_0$

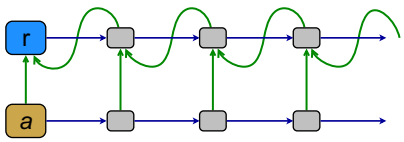

(c)
$\mathcal{S}_2$ … singleton completion of $\mathcal{S}_1$

(d)
$\mathcal{S}$ … extensional pre-completion of $\mathcal{S}_2$
(and thus a pre-completion of $\mathcal{S}_0$)

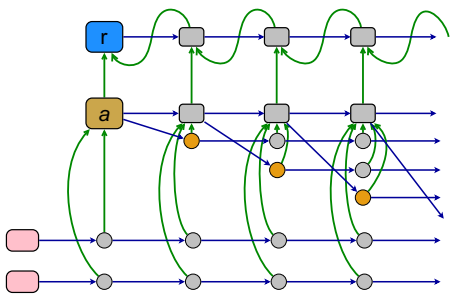

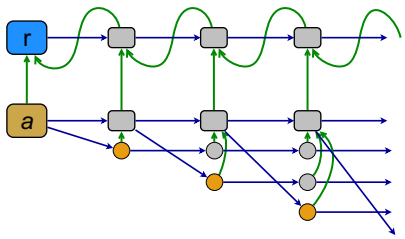

Complete structure of ϵ

By a *complete structure* of ϵ (or a *complete* ϵ-structure) we mean a structure $(\underline{O}, \epsilon)$ where $\underline{O}$ is the set of *objects* and ϵ is a relation between objects satisfying the following conditions:

(co~1) ϵ is well-founded.

(co~2) ϵ is *weakly extensional*: for every x, y from $\underline{O}.\epsilon$, if $x.\ni = y.\ni$ then $x = y$.

(co~3) $\underline{O}.\ni$ is the set of all objects whose ϵ-rank is less than ϖ.

(co~4) For every subset X of $\underline{O}.\ni$ there is an object x such that $x.\ni = X$.

Observation: $(\underline{O}, \epsilon)$ is complete $\leftrightarrow$ $(\underline{O}, \epsilon)$ is pre-complete and satisfies (co~4).
Proof: (ep~1)–(ep~3) are the same as (co~1)–(co~3). Subsequently, (co~4) implies (ep~4)–(ep~7) (use (ep~7)'). □

A metaobject structure $(\underline{O}, \leq, \underline{r}, .ec, .\varepsilon c)$ is *complete* if it is definitionally derived from a complete ϵ-structure according to the table on the right.

$x \leq y$	$\leftrightarrow$	$x = y$ or $\emptyset \neq x.\ni \subseteq y.\ni$
$\underline{r}.\ni$	$=$	$\underline{O}.\ni$
$x.ec = y$	$\leftrightarrow$	$x.\ni^0 = y.\ni$
$x.\varepsilon c = y$	$\leftrightarrow$	$\{x\} = y.\ni$
$x\ \epsilon^0\ y$	$\leftrightarrow$	$x \leq y$ and $x \in \underline{O}.\ni$

An $\epsilon 5$-structure $\mathcal{S} = (\underline{O}, \epsilon, \overline{\epsilon}^{(*)}, \underline{r}, .ec, .\varepsilon\not{c})$ is *complete* if it is a metaobject complete basic structure whose correspondent metaobject structure is complete. That is, $\mathcal{S}$ is (further) derived by

$(\overline{\epsilon}) = (.ec) \circledast (\leq)$,
$(\epsilon) = (\epsilon) \cup (\overline{\epsilon})$,
$(\epsilon^{-k}) = (\leq) \circledast .ec(-k)$ for every natural $k > 0$,
$(.\varepsilon\not{c}) = (.\varepsilon c) \setminus (.ec)$.

We might also say that $\mathcal{S}$ is a *complete structure* of ϵ. By the correspondence between pre-complete $\epsilon 5$-structures and pre-complete ϵ-structures, an $\epsilon 5$-structure $\mathcal{S}$ is complete iff it is a basic structure such that

(A) $\mathcal{S}$ is extensionally consistent: For every objects x, y, $x \leq y \leftrightarrow x = y$ or $\emptyset \neq x.\ni \subseteq y.\ni$.

(B) $\mathcal{S}$ is metaobject complete: (a) $\mathcal{S}$ is powerclass complete and (b) $\mathcal{S}$ is singleton complete.

(C) $\mathcal{S}$ is extensionally complete: For every subset X of $\underline{O}.\ni$ there is an object x such that $x.\ni = X$.

(D) $\mathcal{S}$ is ϵ-ranked: For every object x, $r_\epsilon(x)$ (the ϵ-rank of x) equals $x.d$.

Adding a bottom

By (co~2)+(co~4) there is a one-to-one correspondence between non-empty subsets of $\underline{O}.\ni$ and elements of $\underline{O}.\epsilon$. For the purpose of convenience in expressing meet and join operations in $\leq$ we introduce a *bottom*, $\underline{r}_0$, that represents the empty set. If $\mathcal{S} = (\underline{O}, \epsilon, \overline{\epsilon}^{(*)}, \underline{r}, .ec, .\varepsilon\not{c})$ is a complete $\epsilon 5$-structure then a structure $\mathcal{S}_\perp = (\underline{\Theta}, \epsilon, \overline{\epsilon}^{(*)}, \underline{r}, .ec, .\varepsilon\not{c})$ is called a *lifted version* of $\mathcal{S}$ if it is an extension of $\mathcal{S}$ such that

- $\underline{\Theta} = \underline{O} \uplus \{\underline{r}_0\}$, (that is, $\underline{r}_0$ is the only new object)
- $\underline{r}_0.\ni^i = \underline{r}_0.\overline{\ni}^i = \{\underline{r}_0\}$ and $\underline{r}_0.\epsilon^i = \underline{r}_0.\overline{\epsilon}^i = \underline{\Theta}$ for every integer i, (in particular, $\underline{r}_0 < \underline{O}$)
- $\underline{r}_0.ec = \underline{r}_0$,
- $\{\underline{r}_0\}.\varepsilon\not{c} = \emptyset$.

Obviously, $\mathcal{S}_\perp$ is uniquely given up to isomorphism. We did not introduce $\mathcal{S}_\perp$ as an $\epsilon 5$-structure in order to

preserve the notions of $\mathcal{S}$. (Otherwise we would have to change the definition of $.mli$ since $\underline{r_0}$ is a lower bound of $\underline{H}$.) The metalevel index and rank functions are extended by: $\underline{r_0}.mli = \omega$ and $\underline{r_0}.d = \varpi$. We let the ϵ relation be the same so that $\underline{r_0}$ is regarded as unbounded (i.e. $\emptyset = \underline{r_0}.\ni = \underline{r_0}.\epsilon$). For a subset X of $\underline{O}$, we let the values of $X.\mathrm{I}$, $X.\mathrm{I}$, $X.\triangledown$ or $X.\triangle$ be the same as in $\mathcal{S}$, so that e.g. $\underline{H}.\triangledown$ is empty as before. Similarly for images and pre-images under ϵ^i or $\overline{\epsilon}^i$, $i \in \mathbb{Z}$. Note that this convention only needs to be introduced for pre-images, since $\underline{O}$ is closed w.r.t. images of ϵ^i and $\overline{\epsilon}^i$. When referring to "objects" we mean elements of $\underline{O}$.

We denote $\vee$ ($\bigvee$) and $\wedge$ ($\bigwedge$) the join and meet operations in $(\underline{\Theta}, \leq)$, respectively. That is, if $\{x, y\} \cup X \subseteq \underline{\Theta}$ then

- $\bigwedge X = y \quad \leftrightarrow \quad y$ is the greatest lower bound of X in $(\underline{\Theta}, \leq)$, (note that $\bigwedge X$ exists $\leftrightarrow X \neq \emptyset$)
- $x \wedge y = \bigwedge \{x,y\}$,
- $\bigvee X = y \quad \leftrightarrow \quad y$ is the least upper bound of X in $(\underline{\Theta}, \leq)$,
- $x \vee y = \bigvee \{x,y\}$ (whenever $\bigvee \{x,y\}$ exists).

Furthermore, we also introduce the binary operation of a *difference* between elements of $\underline{\Theta}.\epsilon$:

- $z = x - y \quad \leftrightarrow \quad z.\ni = x.\ni \setminus y.\ni$.

Observations:

1. $\underline{\Theta}.\epsilon = \underline{O}.\epsilon \cup \{\underline{r_0}\}$.
   (Recall that $\underline{O}.\epsilon = \underline{O}.\epsilon = \underline{O} \setminus \underline{T}$, therefore, $\underline{\Theta}.\epsilon$ is the set of non-terminal objects together with $\underline{r_0}$.)
2. $(\underline{\Theta}.\epsilon, \leq)$ is a complete atomic Boolean algebra, isomorphic to $(\mathbb{P}(\underline{O}.\ni), \subseteq)$. The set of atoms equals the set $\underline{O}.\varepsilon c$ of singletons. The join and meet operations are the restrictions of $\bigvee$ and $\bigwedge$ to subsets of $\underline{\Theta}.\epsilon$.
3. For every $X \subseteq \underline{\Theta}$, the join $\bigvee X$ is defined iff either $X \cap \underline{T} = \emptyset$ or $X \subseteq \{x, \underline{r_0}\}$ for some terminal x.
4. For every non-terminal object x, $\quad x = \bigvee x.\ni.\varepsilon c$.
5. For every non-empty set X of non-terminal objects, $\quad (\bigvee X).d = \bigvee X.d$.
6. For every objects x, y, $\quad x.ec \wedge y.ec \;=\; (x \wedge y).ec$.

Proof:

5. Let $\emptyset \neq X \subseteq \underline{O}.\epsilon$ and $u = \bigvee X$ so that $u.\ni = X.\ni$.
   - $u.d \leq \bigvee X.d$ follows by: for every $a \epsilon u$ there is an $x \in X$ such that $a \epsilon x$.
   - $u.d \geq \bigvee X.d$ follows by monotonicity of $.d$ w.r.t. $\leq$.
6. Let x and y be objects. Then for every bounded object a the following holds:
   $$\begin{aligned} a \epsilon (x \wedge y).ec \quad &\leftrightarrow \quad a \leq (x \wedge y) \\ &\leftrightarrow \quad a \leq x \text{ and } a \leq y \\ &\leftrightarrow \quad a \epsilon x.ec \text{ and } a \epsilon y.ec \\ &\leftrightarrow \quad a \epsilon (x.ec \wedge y.ec). \end{aligned}$$

□

The union map

In a complete structure $(\underline{O}, \epsilon)$, the *union map* is denoted $.u$ and is defined as a partial map between objects by

- $x = y.u \quad \leftrightarrow \quad x = \bigvee y.\ni$.

In the lifted version $\mathcal{S}_\perp$ we let $\underline{r_0}.u = \underline{r_0}$. We let the integer powers of $.u$ be denoted and defined in a similar way to that of $.ec$ or $.\varepsilon c$. The 0-th power of $.u$ is the identity map on $\underline{O}.\ni^{-1}$ (which is the domain of $.u$, see observations below).

Observations:

1. Each of the following conditions is equivalent to $x = y.u$:
   i. $x.\ni = y.\ni^2$ and $x \ni^{-1} y$.
   ii. $x.\mathrm{I} = y.\epsilon^{-1}$.
2. The domain of $.u$ equals the set $\underline{O}.\ni^{-1}$ of anti-members. Since $\underline{O}.\ni^{-1} = \underline{r}.\ni^{-1} \uplus \underline{T}.\ni^{-1}$ and $\underline{T}.\ni^{-1} = \underline{T}.ec = \underline{T}.\varepsilon c$,
   $y.u$ is defined $\quad \leftrightarrow \quad$ (a) $\{y\} \cup y.\ni \subseteq \underline{O}.\epsilon$ or (b) $\{x\} = y.\ni$ for some $x \in \underline{T}$.
3. The following inclusion chain applies:
   $(\epsilon^{-1}) \cap (\ni) \;\subseteq\; (.u) \;\subseteq\; (\epsilon^{-1})$.
4. The $.ec$ and $.\varepsilon c$ maps are subrelations of the inverse of $.u$. (A consequence of $(.ec) \cup (.\varepsilon c) \subseteq (\epsilon) \cap (\ni^{-1})$.)

5. If $x = y.u$ then $x.d = sup\{ i \mid i < y.d \}$. That is,
   $x.d + 1 = y.d$ if $y.d$ is a successor ordinal,
   $x.d \quad = y.d$ if $y.d$ is a limit ordinal.

Stages

For every ordinal number i, the *i-th stage* of $\mathcal{S}$ is denoted $\underline{V}_i$ and defined by

$\underline{V}_i = \{ x \in \underline{V} \mid x.d < i \}$.

That is, $\underline{V}_i$ is the set of objects whose rank is strictly less than i. In particular,

- $\underline{V}_0 = \emptyset$,
- $\underline{V}_1 = \underline{O} \setminus \underline{O}.\epsilon = \underline{T}$ is the *ground stage* (consisting of *terminal objects*),
- $\underline{V}_{\underline{\omega}} = \underline{O}.\ni$, is the set of bounded objects,
- $\underline{V}_{\underline{\omega}+1} = \underline{O}$ is the last stage.

Accordingly, for each $0 < i \leq \underline{\omega}$, the i-th *stage object* is denoted $\underline{r}_i$ and defined as the unique object such that

- $\underline{V}_i = \underline{r}_i.\ni$.

The additional bottom $\underline{r}_0$ is regarded as the 0-th stage object.

Each of the following diagrams shows a powerclass complete structure that is a restriction of a complete structure of ϵ to powerclass chains of terminal or stage objects. In the (a) case there is exactly one terminal object, the (b) structure contains at least two terminals.

(a) (b)

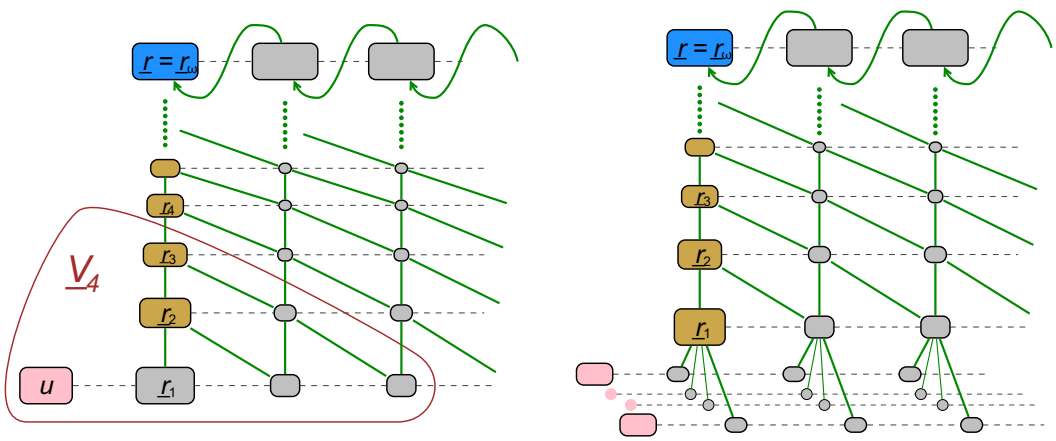

Observations:

1. Each stage object belongs to the 1-st metalevel.
2. Each stage object is primary except for $\underline{r}_1$ in the (a) case.

Proposition A:

1. For every object x and every ordinal $i \leq \underline{\omega}$,
   a. $x \epsilon \underline{r}_i \leftrightarrow x.d < i$,
   b. $x \leq \underline{r}_i \leftrightarrow x.d \leq i$ and $x \notin \underline{T}$.
2. $\underline{r}_{\underline{\omega}} = \underline{r}$.
3. For every non-zero ordinal $i < \underline{\omega}$,
   a. $\underline{r}_{i+1} = \underline{r}_1 \vee \underline{r}_i.ec$.
   b. $\underline{r}_{i+1} = \underline{r}_i \vee \underline{r}_i.ec$.

Proof:

1. (a) follows by definition. To show (b), assume that x is a non-terminal object. Then
   $x.d \leq i \leftrightarrow x.\ni.d < i$ (by definition of ϵ-rank)
   $\leftrightarrow x.\ni \subseteq \underline{r}_i.\ni$ (by (a))

$\leftrightarrow \quad x \leq \underline{r}_i$ (by definition of $\leq$).

2. $\underline{r}_\varpi.\ni = \bigcup\{\underline{r}_i.\ni \mid i < \underline{\varpi}\} = \underline{O}.\ni = \underline{r}.\ni$. It follows that $\underline{r}_\varpi = \underline{r}$.
3.
   a.
   $$x \in \underline{r}_{i+1} \leftrightarrow x.d < i+1 \leftrightarrow x.d \leq i$$
   $$\leftrightarrow x \in \underline{T} \cup \underline{r}_i.\mathrm{I} \quad \text{(by A1b)}$$
   $$\leftrightarrow x \in \underline{r}_1.\ni \cup \underline{r}_i.\mathrm{I} \quad \text{(since } \underline{r}_1.\ni = \underline{T}\text{)}.$$
   As a result, $\underline{r}_{i+1}.\ni = \underline{r}_1.\ni \cup \underline{r}_i.\mathrm{I}$, that is, $\underline{r}_{i+1} = \underline{r}_1 \vee \underline{r}_i.ec$.
   b. This follows by $\underline{r}_1 \leq \underline{r}_i < \underline{r}_{i+1}$. □

Proposition B: For every non-terminal object x and every ordinal $i < \underline{\varpi}$, the following are satisfied.

1. $x.ec \wedge \underline{r}_{i+1} = (x \wedge \underline{r}_i).ec$.
2. $x.ec = \bigvee\{(x \wedge \underline{r}_i).ec \mid i < \underline{\varpi}\}$.

Proof:

1. Assume that x is a non-terminal object and $0 < i < \underline{\varpi}$.
   $$x.ec \wedge \underline{r}_{i+1} = x.ec \wedge (\underline{r}_1 \vee \underline{r}_i.ec) \quad \text{(by A3)}$$
   $$= x.ec \wedge \underline{r}_i.ec \quad \text{(since } x.ec \text{ is disjoint with } \underline{r}_1\text{)}$$
   $$= (x \wedge \underline{r}_i).ec \quad \text{(by observation 6)}.$$
2. Apply the previous proposition.
   $$\bigvee\{(x \wedge \underline{r}_i).ec \mid i < \underline{\varpi}\} = \bigvee\{x.ec \wedge \underline{r}_{i+1} \mid i < \underline{\varpi}\} \quad \text{(by previous proposition)}$$
   $$= x.ec \wedge \bigvee\{\underline{r}_i \mid i < \underline{\varpi}\} \quad \text{(by infinitive distributivity)}$$
   $$= x.ec \wedge \underline{r}_\varpi \quad \text{(by definition of } \underline{r}_\varpi\text{)}$$
   $$= x.ec \quad \text{(since } x.ec \leq \underline{r}_\varpi = \underline{r}\text{)}.$$

□

Existence and uniqueness

Proposition:

1. For every non-zero cardinal number κ there is a complete structure whose ground stage has cardinality κ.
2. Two complete structures are isomorphic iff they have the same cardinality of the ground stage.
   If $.v$ is an isomorphism between (O, ϵ) and (V, ϵ) then $.v$ is uniquely given by its restriction to the ground stage of (O, ϵ) by
   $$x.v.\ni = x.\ni.v \quad \text{for every object } x \text{ from } O.\epsilon.$$

Proof:

1. Proceed by transfinite recursion. For each ordinal $i \leq \underline{\varpi}+1$, define a set V_i by
   $$V_0 = \varnothing,$$
   $$V_1 = \kappa \times \{0\},$$
   $$V_{i+1} = V_i \cup \{(X,i) \mid X \subseteq V_i \text{ and for every } j < i,\ X \nsubseteq V_j\} \text{ if } i > 0,$$
   $$V_i = \bigcup\{V_j \mid j < i\} \quad \text{if } i \text{ is a limit ordinal.}$$
   Subsequently, let (V, ϵ) be an ϵ-structure such that $V = V_{\underline{\varpi}+1}$ and for every (X,i), (Y,j) from V,
   $$(X,i)\ \epsilon\ (Y,j) \leftrightarrow (X,i) \in Y.$$
   We claim that (V, ϵ) is a complete structure whose i-th stage is V_i for every $i \leq \underline{\varpi}+1$. In particular, the ground stage is V_1 and thus has cardinality κ. To prove this, make the following observations. Assume that (X,i) and (Y,j) are from V and $k \leq \underline{\varpi}+1$. Then the following holds:
   a. $(X,i) \in V_k \leftrightarrow i < k$.
   b. $(X,i)\ \epsilon\ (Y,j) \rightarrow i < j$ and thus ϵ is well-founded.
   c. $(Y,j).\ni = Y$ whenever $j > 0$ and thus ϵ is weakly extensional.
   d. $r(X,i) = i$ where $r()$ is the ϵ-rank function.

2. By weak extensionality and well-founded recursion, $.v$ is injective. As a consequence, $.v$ is an embedding of (O,ϵ) into (V,ϵ). The surjectivity of $.v$ is proved by well-founded recursion over (V, ϵ). □

Powerclass cumulation

For an ordinal i, the *i-th (powerclass) cumulation*, $.\mathcal{e}c(i)$, is a map $\underline{\Theta}.\epsilon \to \underline{\Theta}.\epsilon$ defined by transfinite recursion:

$x.\mathcal{e}c(0) = x$,

$x.\mathcal{e}c(i) = x \vee x.\mathcal{e}c(i-1).ec$ if i is a successor ordinal,

$x.\mathcal{e}c(i) = \bigvee \{x.\mathcal{e}c(j) \mid j < i\}$ if i is a limit ordinal.

There is a single recursive formula for every ordinal i:

$x.\mathcal{e}c(i) = x \vee \bigvee \{ x.\mathcal{e}c(j).ec \mid j < i \}$.

We also introduce special notation for $.\mathcal{e}c(1)$ and $.\mathcal{e}c(\underline{\omega})$:

$x.\mathcal{e}c = x \vee x.ec$ (the first cumulation of x),

$x.\mathcal{e}c(\star) = x.\mathcal{e}c(\underline{\omega})$ (the *full cumulation* of x).

For convenience, the following table shows the definition with $x.\mathcal{e}c(i)$ abbreviated to x_i.

	Expressed using $\bigvee$	Expressed via $.\ni$
$i = 0$	$x_0 = x$	$x_0.\ni = x.\ni$
i is a successor ordinal	$x_i = x \vee x_{i-1}.ec$	$x_i.\ni = x.\ni \cup \{ u \mid \varnothing \neq u.\ni \subseteq x_{i-1}.\ni \}$
i is a limit ordinal	$x_i = \bigvee \{x_j \mid j < i\}$	$x_i.\ni = \bigcup \{ x_j.\ni \mid j < i \}$

Observations:

1. The set $\underline{O}$ is closed w.r.t. each $.\mathcal{e}c(i)$.
2. The bottom $\underline{r}_0$ is a fixpoint of $.\mathcal{e}c(i)$ for every ordinal i.
3. An object x is a fixpoint of $.\mathcal{e}c \quad \leftrightarrow \quad x \in x$.
   Proof: $x \in x \leftrightarrow x \overline{\in} x \leftrightarrow x.ec \leq x \leftrightarrow x \vee x.ec = x$.
4. Stage objects arise by powerclass cumulation of the ground stage object $\underline{r}_1$:
   - $\underline{r}_{1+i} = \underline{r}_1.\mathcal{e}c(i)$ for every ordinal $i \leq \underline{\omega}$.
5. (A consequence of monotonicity of $.ec$.) For every x, y from $\underline{\Theta}.\epsilon$ and every ordinals i, j,
   $i \leq j \quad \to \quad x.\mathcal{e}c(i) \leq x.\mathcal{e}c(j)$,
   $x \leq y \quad \to \quad x.\mathcal{e}c(i) \leq y.\mathcal{e}c(i)$.
   That is, for every non-zero ordinal i, $.\mathcal{e}c(i)$ is (a) increasing and (b) monotone.

Proposition:
Assume that x is a non-terminal object and i, j ordinal numbers.

1. $x.\mathcal{e}c(i).\mathcal{e}c(j) = x.\mathcal{e}c(i+j)$.
2. $x.\mathcal{e}c(i).d = (x.d + i) \wedge \underline{\omega}$. (That is, the i-th cumulation increases the rank of x by i whenever $x.d + i \leq \underline{\omega}$.)

Proof:

1. Assume that x is a non-terminal object, i, j ordinals numbers and proceed by transfinite induction over j.
   $x.\mathcal{e}c(i).\mathcal{e}c(j) = x.\mathcal{e}c(i) \vee \bigvee \{x.\mathcal{e}c(i).\mathcal{e}c(k).ec \mid k < j\}$ (by definition of $.\mathcal{e}c(j)$)
   $= x.\mathcal{e}c(i) \vee \bigvee \{x.\mathcal{e}c(i+k).ec \mid k < j\}$ (by the induction assumption)
   $= x.\mathcal{e}c(i) \vee x \vee \bigvee \{x.\mathcal{e}c(i+k).ec \mid k < j\}$ (since $x \leq x.\mathcal{e}c(i)$)
   $= x.\mathcal{e}c(i) \vee x \vee \bigvee \{x.\mathcal{e}c(i+k).ec \mid i+k < i+j\}$ (since $k < j \leftrightarrow i+k < i+j$)
   $= x.\mathcal{e}c(i) \vee x.\mathcal{e}c(i+j)$ (by definition of $x.\mathcal{e}c(i+j)$, using $x.\mathcal{e}c(n) \leq x.\mathcal{e}c(i)$ for $n \leq i$)
   $= x.\mathcal{e}c(i+j)$ (since $x.\mathcal{e}c(i) \leq x.\mathcal{e}c(i+j)$).
2. Assume that x is a non-terminal object and proceed by transfinite induction.
   $x.\mathcal{e}c(i).d = (x \vee \bigvee \{x.\mathcal{e}c(k).ec \mid k < i\}).d$ (by definition of $.\mathcal{e}c(i)$)
   $= x.d \vee \bigvee \{x.\mathcal{e}c(k).ec.d \mid k < i\}$ (by properties of $.d$)
   $= x.d \vee \bigvee \{(x.\mathcal{e}c(k).d + 1) \wedge \underline{\omega} \mid k < i\}$ (by properties of $.ec$)

$= x.d \vee \bigvee\{(x.d + k + 1) \wedge \underline{\varpi} \mid k < i\}$ (by the induction assumption)

$= x.d + \bigvee\{(k + 1) \wedge \underline{\varpi} \mid k < i\}$

$= (x.d + i) \wedge \underline{\varpi}$.

□

The $.\mathcal{ec}(\star)$ operator

The following proposition shows that the $\underline{\varpi}$-th cumulation map $.\mathcal{ec}(\star)$ is a closure operator on the set $\underline{\Theta}.\epsilon = \underline{O}.\epsilon \cup \{\underline{r}_0\}$. The *fully cumulated* objects are exactly the circular objects, i.e. for every object x,

$$x \epsilon x \quad \leftrightarrow \quad x \in \underline{O}.\mathcal{ec}(\star).$$

That is, $\underline{O}.\mathcal{ec}(\star)$ are the fixpoints of $.\mathcal{ec}$ – using the observation that $x \epsilon x \leftrightarrow x.\mathcal{ec} = x$.

Proposition:

1. For every x from $\underline{\Theta}.\epsilon$ and every ordinals i, j, the following are satisfied.
   a. $x.\mathcal{ec}(j) \wedge \underline{r}_i \leq x.\mathcal{ec}(i)$.
   b. $x.\mathcal{ec}(\star).ec \leq x.\mathcal{ec}(\star)$.
   c. $x.\mathcal{ec}(\underline{\varpi}+i) = x.\mathcal{ec}(\star)$.
2. Corollary: $.\mathcal{ec}(\star)$ is a closure operator on $\underline{\Theta}.\epsilon$. That is, $.\mathcal{ec}(\star)$ is increasing, monotone and
   - idempotent: $.\mathcal{ec}(\star).\mathcal{ec}(\star) = .\mathcal{ec}(\star)$.

Proof:

1. Let x be from $\underline{\Theta}.\epsilon$.
   a. Proceed by transfinite induction over pairs (i,j). For $i = 0$ the inequality reduces to $\underline{r}_0 \leq x$ which is satisfied by definition of $\underline{r}_0$. For $j = 0$ the inequality reduces to $x \wedge \underline{r}_i \leq x.\mathcal{ec}(i)$ which follows by $x \leq x.\mathcal{ec}(i)$. If i and j are both successor ordinals then

   $x.\mathcal{ec}(j) \wedge \underline{r}_i = (x \vee x.\mathcal{ec}(j-1).ec) \wedge \underline{r}_i$ (by definition of $.\mathcal{ec}(j)$)

   $= (x \wedge \underline{r}_i) \vee (x.\mathcal{ec}(j-1).ec \wedge \underline{r}_i)$ (by distributivity of $\vee$ and $\wedge$)

   $\leq x \vee (x.\mathcal{ec}(j-1).ec \wedge \underline{r}_i)$ (since $x \wedge \underline{r}_i \leq x$)

   $= x \vee (x.\mathcal{ec}(j-1) \wedge \underline{r}_{i-1}).ec$ (using proposition B1)

   $\leq x \vee x.\mathcal{ec}(i-1).ec$ (since $x.\mathcal{ec}(j-1) \wedge \underline{r}_{i-1} \leq x.\mathcal{ec}(i-1)$ by the induction assumption)

   $= x.\mathcal{ec}(i)$ (by the definition of $.\mathcal{ec}(i)$).

   If j is a limit ordinal then

   $x.\mathcal{ec}(j) \wedge \underline{r}_i = \bigvee\{ x.\mathcal{ec}(k) \mid k < j \} \wedge \underline{r}_i$ (by definition of $.\mathcal{ec}(j)$)

   $= \bigvee\{ x.\mathcal{ec}(k) \wedge \underline{r}_i \mid k < j \}$ (by infinite distributivity)

   $\leq \bigvee\{ x.\mathcal{ec}(i) \mid k < j \}$ (by the induction assumption)

   $= x.\mathcal{ec}(i)$.

   If i is a limit ordinal then

   $x.\mathcal{ec}(j) \wedge \underline{r}_i = x.\mathcal{ec}(j) \wedge \bigvee\{ \underline{r}_k \mid k < i \}$ (by definition of $\underline{r}_i$)

   $= \bigvee\{ x.\mathcal{ec}(j) \wedge \underline{r}_k \mid k < i \}$ (by infinite distributivity)

   $\leq \bigvee\{ x.\mathcal{ec}(k) \mid k < i \}$ (by the induction assumption)

   $= x.\mathcal{ec}(i)$.

   b.

   $x.\mathcal{ec}(\star).ec = \bigvee\{ (x.\mathcal{ec}(\star) \wedge \underline{r}_i).ec \mid i < \underline{\varpi} \}$ (by proposition B2)

   $\leq \bigvee\{ (x.\mathcal{ec}(i).ec \mid i < \underline{\varpi} \}$ (by the previous proposition (a))

   $\leq \bigvee\{ (x \vee x.\mathcal{ec}(i).ec \mid i < \underline{\varpi} \}$

   $= x.\mathcal{ec}(\star)$ (by definition of $.\mathcal{ec}(\star) = .\mathcal{ec}(\underline{\varpi})$).

   c. By the previous proposition, $.ec$ is decreasing on $\underline{O}.\mathcal{ec}(\star)$, therefore, for every x from $\underline{O}.\mathcal{ec}(\star)$,
      - $x.\mathcal{ec} = x \vee x.ec = x$,

which shows that $.\mathcal{ec}(\star).\mathcal{ec} = .\mathcal{ec}(\star)$. □

Completion

This section describes the final step of completion of basic structures of ϵ:

pre-complete structure → complete structure.

For a given pre-complete structure $\mathcal{S} = (\underline{O}, \epsilon)$ we construct a faithful embedding $.v$ of $\mathcal{S}$ into a complete structure $\mathcal{V} = (\underline{V}, \epsilon)$ whose ground stage $\underline{V}_1 = \underline{V} \setminus \underline{V}.\epsilon$ has the same cardinality as the set $\underline{T} = \underline{O} \setminus \underline{O}.\epsilon$ of terminal objects of $\mathcal{S}$. As a consequence we obtain the following:

> *Completion theorem:*
> Every basic structure can be faithfully extended to (embedded into) a complete structure.

Since every complete structure is pre-complete and both the pre-completion as well as the $.v$ embedding described in this section are idempotent, we can speak about *completion* of basic structures. The completion theorem can be shortly stated as:

Every basic structure has a completion.

Embedding sequence

Let $\mathcal{S} = (\underline{O}, \epsilon)$ and $\mathcal{V} = (\underline{V}, \epsilon)$ be ϵ-structures such that $\mathcal{S}$ is pre-complete and $\mathcal{V}$ is complete. We say that a transfinite sequence

$.v_0, .v_1, \ldots, .v_{\underline{\varpi}} = .v$

of maps from $\underline{O}$ to $\underline{V}$ is an *embedding sequence* (w.r.t. $\mathcal{S}$ and $\underline{V}$) if the following are satisfied:

I. The restriction of $.v_i$ to terminals is for every i identical and forms a bijection between $\underline{T}$ and $\underline{V}_1$. (∗)

II. The restriction of $.v_i$ to the set $\underline{O}.\epsilon$ of non-terminal objects x is defined according to the following table.

	Expressed via $.\ni$	Expressed using $\bigvee$
$i = 0$	$x.v_0.\ni = x.\overline{\ni}.v_0.ec.\ni \cup x.\ni.v_0$	$x.v_0 = \bigvee (x.\overline{\ni}.v_0.ec \cup x.\ni.v_0.\varepsilon c)$
i is a successor ordinal	$x.v_i.\ni = x.\overline{\ni}.v_{i-1}.ec.\ni \cup x.\ni.v_0$	$x.v_i = \bigvee (x.\overline{\ni}.v_{i-1}.ec \cup x.\ni.v_0.\varepsilon c)$
i is a limit ordinal	$x.v_i.\ni = \bigcup \{ x.v_k.\ni \mid k < i \}$	$x.v_i = \bigvee \{ x.v_k \mid k < i \}$

Notes:

1. (∗) To avoid notational conflicts, we refer to the set of terminals of $\mathcal{V}$ by $\underline{V}_1$ (the ground stage of $\mathcal{V}$). Similarly, the inheritance root of $\mathcal{V}$ is referred to by $\underline{r}_{\underline{\varpi}}$ (the $\underline{\varpi}$-th stage object).
2. We can consider $.v_i$ to be defined for every ordinal i. Since $.ec$ and $.v$ commute (as shown below) it follows that

   $.v_{\underline{\varpi}} = .v_{\underline{\varpi}+1} = \ldots = .v_i$ for every ordinal $i \geq \underline{\varpi}$.

Observations A:

1. For a non-terminal x,
   - $x.v_0$ is defined by well-founded recursion, using well-foundedness of ϵ,
   - $x.v_i$ for $0 < i \leq \underline{\varpi}$ is defined by transfinite induction over i. Note that $\overline{\ni}$ is used, not $\overline{\ni}$.
2. By definition, $.ec.\ni = .\ni^0$. In case of $i = 0$, we can even use $.\mathrm{I}$ instead of $.\ni^0$.

Observations B:

1. For a bounded object x, $x.v_0 = x.v_i = x.v$ for every ordinal i.
2. For every object x, $x.v_i \leq x.v_{i+1} \leq x.v$ for every ordinal i.

Proof:

1. If x is a bounded non-terminal object then $x.\overline{\ni} = x.\overline{\ni}$ so that the prescriptions for $x.v_0$ and $x.v_1$ are coincident.
2. Proceed by transfinite induction over i. The case $i = 0$ follows by definition of $.v_0$ and $.v_1$ (using the fact that ϵ is a restriction of ϵ). For a successor ordinal i we apply the induction assumption (in particular, $x.\overline{\ni}.v_{i-1}.ec.\ni \subseteq x.\overline{\ni}.v_i.ec.\ni$):
   - $x.v_i.\ni \;=\; x.\overline{\ni}.v_{i-1}.ec.\ni \cup x.\ni.v_0 \;\subseteq\; x.\overline{\ni}.v_i.ec.\ni \cup x.\ni.v_0 \;=\; x.v_{i+1}.\ni$. □

The embedding theorem

Theorem: Let $.v_0, .v_1, \ldots, .v_{\underline{\omega}} = .v$ be an embedding sequence w.r.t. $\mathcal{S}$ and $\mathcal{V}$ as in the previous subsection. Then $.v$ is a faithful embedding of $\mathcal{S}$ into $\mathcal{V}$. That is,

1. $.v$ is an embedding of the basic structure $(\underline{O}, \epsilon, \overline{\epsilon}^{(*)}, \underline{r}, .ec, .\varepsilon\varsigma)$ into the basic structure $(\underline{V}, \epsilon, \overline{\epsilon}^{(*)}, \underline{r}_{\underline{\omega}}, .ec, .\varepsilon\varsigma)$.
2. $.v$ is faithful w.r.t. $.pr$, ϵ^i, $\overline{\epsilon}^i$ and $.d$.

Proof:
The proof is accomplished in the series of claims A–E below.

Claim A

Claim A: For every objects x, y from $\underline{O}$ the following holds.

1. $x.v_0.d = x.v.d = x.d$.
2.
   a. $x \epsilon y \;\leftrightarrow\; x.v_0 \epsilon y.v_0$. (That is, $y.\ni.v_0 = y.v_0.\ni \cap \underline{O}.v_0$ whenever y is non-terminal.)
   b. $x \leq y \;\leftrightarrow\; x.v_0 \leq y.v_0$. (That is, $y.\mathrm{I}.v_0 = y.v_0.\mathrm{I} \cap \underline{O}.v_0$. In particular, $.v_0$ is injective.)

Proof:

1. Proceed by well-founded induction on $(\underline{O}, \epsilon)$.
   $x.v_0.d = sup\{ b.d + 1 \mid b \in x.\overline{\ni}.v_0.\mathrm{I} \cup x.\ni.v_0 \}$
   $= sup\{ b.d + 1 \mid b \in x.\ni.v_0 \}$ (since $.d$ is monotone in $\mathcal{V}$)
   $= sup\{ a.v_0.d + 1 \mid a \epsilon x \}$
   $= sup\{ a.d + 1 \mid a \epsilon x \}$ (since $a.v_0.d = a.d$ by the induction assumption)
   $= x.d$.
   If x is bounded, then $x.v_0 = x.v$. If x is unbounded, then $\underline{\omega} = x.d = x.v_0.d \leq x.v.d \leq \underline{\omega}$. In both cases, we obtain $x.v_0.d = x.v.d$ as a consequence.
2. We first show the "→" direction. By (1), if x is bounded then so is $x.v_0$. Therefore
   a. $x \epsilon y \;\rightarrow\; x.v_0 \in y.\ni.v_0 \subseteq y.v_0.\ni$.
   b. If $x \leq y$ and x is terminal then $x = y$. Otherwise
      $x \leq y \;\leftrightarrow\; x.\ni \subseteq y.\ni$ (in particular, $x.\overline{\ni} \subseteq y.\overline{\ni}$)
      $\rightarrow\; x.\overline{\ni}.v_0.\mathrm{I} \cup x.\ni.v_0 \;\subseteq\; y.\overline{\ni}.v_0.\mathrm{I} \cup y.\ni.v_0 \;\leftrightarrow\; x.v_0 \leq y.v_0$.

   The "←" direction is shown by well-founded induction on $(\underline{V}, \epsilon)$. If $y.v_0$ has rank 0 (i.e. y is terminal), then the implications are trivially satisfied. Otherwise denote $d = y.d$ and assume that for every non-terminal object u such that $u.d < d$, (a) $u.\ni.v_0 = u.v_0.\ni \cap \underline{O}.v_0$ and (b) $u.\mathrm{I}.v_0 = u.v_0.\mathrm{I} \cap \underline{O}.v_0$.
   a. Let $x.v_0 \epsilon y.v_0$. By definition of $y.v_0$, there exists an object b from $\underline{O}$ such that either
      i. $x.v_0 \leq b.v_0$ and $b \overline{\epsilon} y$, or
      ii. $x.v_0 = b.v_0$ and $b \epsilon y$.

      If b is such that (ii) is satisfied then $x = b$ (since by the induction assumption, $.v_0$ is injective on objects of rank less than d), thus $x \epsilon y$. If b is such that (i) is satisfied then we obtain
      - $x \leq b$ (by induction assumption for x and b – both x and b have rank less than d),
      - $x \overline{\epsilon} y$ (since $x \leq b \overline{\epsilon} y$).

b. For a non-terminal x we obtain

$$\begin{aligned} x.v_0 \le y.v_0 \quad &\leftrightarrow \quad x.v_0.\ni \subseteq y.v_0.\ni \\ &\rightarrow \quad x.v_0.\ni \cap \underline{O}.v_0 \subseteq y.v_0.\ni \cap \underline{O}.v_0 \\ &\leftrightarrow \quad x.\ni.v_0 \subseteq y.\ni.v_0 \quad \text{(by the just proved (a))}, \\ &\leftrightarrow \quad x.\ni \subseteq y.\ni \quad \text{(by injectivity of } .v_0 \text{ due to the induction assumption)}, \\ &\leftrightarrow \quad x \le y. \end{aligned}$$

□

Claim B

Claim B: For every objects x, y from $\underline{O}$ and every ordinal i, the following are satisfied.

1.
   a. $x \in y \quad \leftrightarrow \quad x.v_0 \in y.v_i$. (That is, $y.\ni.v_0 = y.v_i.\ni \cap \underline{O}.v_0$ whenever y is non-terminal.)
   b. $x \le y \quad \leftrightarrow \quad x.v_i \le y.v_i$. (That is, $y.\mathrm{I}.v_i = y.v_i.\mathrm{I} \cap \underline{O}.v_i$. In particular, $.v_i$ is injective.)
2. As a particular consequence for $i = \underline{\omega}$,
   a. $x \in y \quad \leftrightarrow \quad x.v \in y.v$,
   b. $x \le y \quad \leftrightarrow \quad x.v \le y.v$.

Proof:

Proceed by transfinite induction over i. The case $i = 0$ has been proved in A2. Assume that $i > 0$ and that

(a) $x \in y \quad \leftrightarrow \quad x.v_0 \in y.v_k$, (b) $x \le y \quad \leftrightarrow \quad x.v_k \le y.v_k$.

for every $k < i$. We proceed similarly as in A2 and show first the "→" direction.

→:

a.

$$\begin{aligned} x \in y \quad &\leftrightarrow \quad x.v_0 \in y.v_0 \quad \text{(by A2)} \\ &\rightarrow \quad x.v_0 \in y.v_i \quad \text{(since } y.\ni.v_0 \subseteq y.v_0.\ni \subseteq y.v_i.\ni\text{)}. \end{aligned}$$

b. If $x \le y$ and x is terminal then $x = y$. Otherwise if i is a successor ordinal then

$$\begin{aligned} x \le y \quad &\leftrightarrow \quad x.\ni \subseteq y.\ni \quad \leftrightarrow \quad x.\ni \subseteq y.\ni \quad \text{(in particular, } x.\overline{\ni} \subseteq y.\overline{\ni}\text{)} \\ &\rightarrow \quad x.\overline{\ni}.v_{i-1}.ec.\ni \cup x.\ni.v_0 \quad \subseteq \quad y.\overline{\ni}.v_{i-1}.ec.\ni \cup y.\ni.v_0 \quad \leftrightarrow \quad x.v_i \le y.v_i. \end{aligned}$$

If i is a successor ordinal then

$$\begin{aligned} x \le y \quad &\leftrightarrow \quad x.v_k \le y.v_k \quad \text{for every } k < i \quad \text{(by the induction assumption)} \\ &\rightarrow \quad x.v_i \le y.v_i \quad \text{(by definition of } .v_i \text{ for a limit } i\text{)}. \end{aligned}$$

←:

a. Let $x.v_0 \in y.v_i$ and assume that i is a successor ordinal. By definition of $y.v_i$, there exists an object b from $\underline{O}$ such that either
   i. $x.v_0 \le b.v_{i-1}$ and $b \,\overline{\in}\, y$, or
   ii. $x.v_0 = b.v_0$ and $b \in y$.

   If (ii) is satisfied then $x = b$ and thus $x \in y$. If (i) is satisfied we obtain
   - $x \le b$ (by the induction assumption),
   - $x \,\overline{\in}\, y$ (since $x \le b \,\overline{\in}\, y$ and x is bounded).

   Assume now that i is a limit ordinal. Then

$$\begin{aligned} x.v_0 \in y.v_i \quad &\leftrightarrow \quad x.v_0 \in \bigcup\{ y.v_k.\ni \mid k < i \} \quad \text{(by definition of } y.v_i\text{)}. \\ &\leftrightarrow \quad x.v_0 \in y.v_k \text{ for some ordinal } k < i \\ &\leftrightarrow \quad x \in y \quad \text{(by the induction assumption)}. \end{aligned}$$

b. For a non-terminal x we obtain

$$\begin{aligned} x.v_i \le y.v_i \quad &\leftrightarrow \quad x.v_i.\ni \subseteq y.v_i.\ni \\ &\rightarrow \quad x.v_i.\ni \cap \underline{O}.v_0 \subseteq y.v_i.\ni \cap \underline{O}.v_0 \\ &\leftrightarrow \quad x.\ni.v_0 \subseteq y.\ni.v_0 \quad \text{(by the just proved (a))} \end{aligned}$$

$\leftrightarrow \quad x.\ni \subseteq y.\ni$ (by injectivity of $.v_0$)

$\leftrightarrow \quad x \leq y.$

□

Claim C

Claim C: For every object x from $\underline{O}$ and every ordinals i, j, the following is satisfied.

1. $(x.v_j \wedge \underline{r}_i) \leq x.v_i$. Corollary: If $i \leq j$ then $x.v_j \wedge \underline{r}_i = x.v_i \wedge \underline{r}_i$.
2. $x.ec.v_{i+1} = x.v_i.ec$.
3. $x.ec.v = x.v.ec$.
4. $x.pr.v = x.v.pr$. (That is, $.v$ preserves primary objects.)

Proof:

1. The inequality holds trivially for bounded objects x. (Recall that if $x \in \underline{O}.\ni$ then $x.v_i = x.v_j$.) Assume further that x is unbounded and proceed by transfinite induction over pairs (i,j). For $i = 0$ the inequality holds by definition of $\underline{r}_0$ as the artificial bottom object. For $j = 0$ the inequality holds by the monotonicity of the embedding sequence (if $j \leq i$ then $.v_j \leq .v_i$). If i is a limit ordinal then

   $x.v_j \wedge \underline{r}_i = x.v_j \wedge \bigvee\{\underline{r}_k \mid k < i\} = \bigvee\{x.v_j \wedge \underline{r}_k \mid k < i\}$ (by infinite distributivity)

   $\leq \bigvee\{x.v_k \mid k < i\}$ (by the induction assumption)

   $= x.v_i.$

   Similarly, if j is a limit ordinal then

   $x.v_j \wedge \underline{r}_i = \bigvee\{x.v_k \mid k < j\} \wedge \underline{r}_i = \bigvee\{x.v_k \wedge \underline{r}_i \mid k < j\}$ (by infinite distributivity)

   $\leq \bigvee\{x.v_i \mid k < j\}$ (by the induction assumption)

   $= x.v_i.$

   Assume finally that both i and j are successor ordinals. By definition, $x.v_j.\ni = x.\overline{\ni}.v_{j-1}.ec.\ni \cup x.\ni.v_0$. By B1a, $x.\ni.v_0 \subseteq x.v_i.\ni$, therefore, it is sufficient to show that for every object a from $x.\overline{\ni}$,

   - $(a.v_{j-1}.ec \wedge \underline{r}_i) \leq x.v_i$.

   If a is bounded then $a.v_{j-1}.ec = a.v_0.ec \leq x.v_0 \leq x.v_i$. Assume further that a is unbounded, in particular, $a.v_{j-1}$ is non-terminal. Then for every bounded object b from $\underline{V}$,

   $b \in (a.v_{j-1}.ec \wedge \underline{r}_i) \leftrightarrow b \in (a.v_{j-1} \wedge \underline{r}_{i-1}).ec$ (by proposition B1 ($a.v_{j-1}$ is non-terminal))

   $\leftrightarrow b \leq (a.v_{j-1} \wedge \underline{r}_{i-1})$ (by definition of $.ec$)

   $\rightarrow b \leq a.v_{i-1}$ (by the induction assumption)

   $\rightarrow b \in x.\overline{\ni}.v_{i-1}.ec.\ni$ (since a is from $x.\overline{\ni}$)

   $\rightarrow b \in x.v_i$ (since $x.\overline{\ni}.v_{i-1}.ec.\ni \subseteq x.v_i.\ni$).

2. The equality is shown by

   $x.ec.v_{i+1}.\ni = x.ec.\overline{\ni}.v_i.ec.\ni \cup x.ec.\ni.v_i$ (by definition of $.v_{i+1}$, using $.v_0 = .v_i$ on $\underline{O}.\ni$)

   $= x.ec.\overline{\ni}.v_i.ec.\ni$ (since $x.ec.\ni = x.ec.\overline{\ni} \subseteq x.ec.\overline{\ni}$)

   $= x.\mathrm{I}.v_i.ec.\ni$ (since $.\mathrm{I} = .ec.\overline{\ni}$)

   $= x.v_i.ec.\ni$ (by monotonicity of $.v_i.ec$).

3. If x is bounded then, using the previous statement, $x.ec.v = x.ec.v_0 = x.ec.v_1 = x.v_0.ec = x.v.ec$. Assume that x is unbounded, in particular, non-terminal. Then

   $x.ec.v = x.ec.v \wedge \underline{r}_{\underline{\omega}}$ (since $x.ec.v \leq \underline{r}_{\underline{\omega}}$)

   $= x.ec.v \wedge \bigvee\{\underline{r}_i \mid i < \underline{\omega}\}$ (by definition of $\underline{r}_{\underline{\omega}}$)

   $= \bigvee\{x.ec.v \wedge \underline{r}_i \mid i < \underline{\omega}\}$ (by infinite distributivity)

   $= \bigvee\{x.ec.v_i \wedge \underline{r}_i \mid i < \underline{\omega}\}$ (since $x.ec.v \wedge \underline{r}_i = x.ec.v_i \wedge \underline{r}_i$ by C1)

$= \bigvee \{ x.ec.v_{i+1} \wedge \underline{r}_i \mid i < \underline{\varpi} \}$ (since $y.v_i \le y.v_{i+1} \le y.v$ for $y = x.ec$)

$= \bigvee \{ x.v_i.ec \wedge \underline{r}_i \mid i < \underline{\varpi} \}$ (since $.ec.v_{i+1} = .v_i.ec$ by C2)

$= \bigvee \{ (x.v_i \wedge \underline{r}_i).ec \mid i < \underline{\varpi} \}$ (by proposition B1 ($x.v_i$ is non-terminal))

$= \bigvee \{ (x.v \wedge \underline{r}_i).ec \mid i < \underline{\varpi} \}$ (since $x.v_i \wedge \underline{r}_i = x.v \wedge \underline{r}_i$ by C1)

$= x.v.ec$ (by proposition B2).

4. Let x be an object from $\underline{O}$ such that $x.v$ is a powerclass, that is $x.v = u.ec$ for some u from $\underline{V}$. Recall that by definition of $.ec$,
   - $u.\mathfrak{l} = x.v.\ni$.

   We should prove that x is a powerclass as well (equivalently, that u is from $\underline{O}.v$). If $x.\ni$ contains a terminal object a then, since $a.v$ is also terminal (in $\mathcal{V}$), $\{a.v\} = x.v.\ni$, so that $a.v = u$. We can therefore further assume that $x.\ni \cap \underline{T} = \varnothing$. By pre-completeness of $\mathcal{S}$ it is sufficient to show that x is powerclass-like, that is
   a. $x.\ni = x.\overline{\ni}$, and
   b. $X.\triangle \cap x.\ni \ne \varnothing$ for every non-empty bounded subset X of $x.\ni$.

   The (a) equality follows from the embedding properties of $.v$ w.r.t. $\in$ and $\overline{\in}$. To prove (b), assume that X is a non-empty bounded subset of $x.\ni$. We obtain
   - $c = \bigvee X.v$ exists (since $X \cap \underline{T} = \varnothing$ and thus $X.v \cap \underline{V}_1 = \varnothing$)
   - $c \in x.v.\ni$, (since $X.v \subseteq x.v.\ni = u.\mathfrak{l}$)
   - $c \in x.v.\ni$, (since X is bounded and therefore so is c)
   - $c \le a.v$ for some a from $x.\ni$, (since $x.v.\ni = x.\ni.v.ec.\ni = x.\ni.v.\mathfrak{l} \cap \underline{V}.\ni$)
   - $X \le a$, (since $X.v \le c \le a.v$)
   - $X.\triangle \cap x.\ni \ne \varnothing$. (since $a \in X.\triangle \cap x.\ni$) □

Claim D

Claim D:

1. For every object x from $\underline{O}$ such that $x \in x$ and every ordinal i, the following is satisfied.
   a. $x.v_i.ec \le x.v_{i+1}$,
   b. $x.v_0.\mathcal{e}c(i) \le x.v_i$.
2. $\underline{r}.v = \underline{r}_{\underline{\varpi}}$.

Proof:

1. Let x be such that $x \in x$. (a) follows directly by definition of $.v_{i+1}$. (b) is proved by transfinite induction over i. For $i = 0$, (b) reduces to $x.v_0 \le x.v_i$ which holds by observation B2. If i is a successor ordinal then

   $x.v_0.\mathcal{e}c(i) = x.v_0 \vee x.v_0.\mathcal{e}c(i\text{-}1).ec$ (by definition of $.\mathcal{e}c(i)$)

   $\le x.v_0 \vee x.v_{i\text{-}1}.ec$ (by the induction assumption)

   $\le x.v_0 \vee x.v_i$ (since $x.v_{i\text{-}1}.ec \le x.v_i$ by (a))

   $= x.v_i$ (since $x.v_0 \le x.v_i$ by observation B2).

   If i is a limit ordinal then

   $x.v_0.\mathcal{e}c(i) = \bigvee \{ x.v_0.\mathcal{e}c(k) \mid k < i \}$

   $\le \bigvee \{ x.v_k \mid k < i \}$ (by the induction assumption)

   $= x.v_i$.
2. The equality $\underline{r}.v = \underline{r}_{\underline{\varpi}}$ is shown by

   $\underline{r}_{\underline{\varpi}} = \underline{r}_1.\mathcal{e}c(\underline{\varpi}) \le \underline{r}.v_0.\mathcal{e}c(\underline{\varpi})$ (since $\underline{r}_1 \le \underline{r}.v_0$ and $.\mathcal{e}c(\underline{\varpi})$ is monotonic)

   $\le \underline{r}.v$ (since $\underline{r} \in \underline{r}$ so that (1b) applies for $i = \underline{\varpi}$)

   $\le \underline{r}_{\underline{\varpi}}$ (since $\underline{r}_{\underline{\varpi}}$ is the top of $\underline{V}.\in$).

□

Claim E

Claim E:

1. For every bounded object x from $\underline{O}$, $x.\varepsilon\!\!\!\varepsilon.v = x.v.\varepsilon\!\!\!\varepsilon$.
2. For every objects x, y from $\underline{O}$ and every integer n, $x\,\overline{\epsilon}^n\,y \;\leftrightarrow\; x.v\,\overline{\epsilon}^n\,y.v$.
3. For every objects x, y from $\underline{O}$ and every natural n, $x\,\epsilon^n\,y \;\leftrightarrow\; x.v\,\epsilon^n\,y.v$.

Proof:

1. Let x, y be objects from $\underline{O}$ such that $x.\varepsilon\!\!\!\varepsilon = y$, i.e. $\{x\} = y.\ni$ and y is primary. We should prove that $x.v.\varepsilon\!\!\!\varepsilon = y.v$, equivalently, (a) $\{x\}.v = y.v.\ni$ and (b) $y.v$ is primary. The (b) condition follows by claim C4. The (a) condition is shown by

   $y.v.\ni = y.\overline{\ni}.v.\mathrm{I} \cup y.\ni.v$ (since y is bounded)

   $= y.\ni.v$ (since $y.\overline{\ni} = \varnothing$)

   $= \{x\}.v$ (since $\{x\} = y.\ni$).
2. This follows by powerclass completeness of both $\mathcal{S}$ and $\mathcal{V}$ (so that $(\overline{\epsilon}^i) = (\leq) \circledcirc .ec(i) \circledcirc (\leq)$ in both $\mathcal{S}$ and $\mathcal{V}$).
3. Let x, y be objects from $\underline{O}$ and n a positive natural number. For $n = 1$ we have

   ◦ $x\,\epsilon\,y \;\leftrightarrow\; x\,\epsilon\,y$ or $x\,\overline{\epsilon}\,y \;\leftrightarrow\; x.v\,\epsilon\,y.v$ or $x.v\,\overline{\epsilon}\,y.v \;\leftrightarrow\; x.v\,\epsilon\,y.v$.

   Assume further that $n > 1$. It is then sufficient to show that $x.v\,\epsilon^n\,y.v \rightarrow x\,\epsilon^n\,y$. (The opposite implication follows by embedding of ϵ.) Assume therefore that $x.v\,\epsilon^n\,y.v$. Since $x.v.\overline{\epsilon}^n = x.v.\epsilon^n$ for unbounded x, we can in addition assume that x is bounded so that $x.v\,\epsilon^n\,y.v$.

   $x.v\,\epsilon^n\,y.v \;\leftrightarrow\; x.v\,\epsilon^{n-1}\,b\,\epsilon\,y.v$ for some b from $\mathcal{V}$ (by relational composition)

   $\leftrightarrow\; x.v\,\epsilon^{n-1}\,b \leq u.v\,\epsilon\,y.v$ for some b from $\mathcal{V}$ and u from $y.\ni$ (by definition of $y.v.\ni$)

   $\rightarrow\; x.v\,\epsilon^{n-1}\,u.v\,\epsilon\,y.v$ for some u from $y.\ni$ (since $(\epsilon^n) \circledcirc (\leq) \subseteq (\epsilon^n)$)

   $\rightarrow\; x\,\epsilon^{n-1}\,u\,\epsilon\,y$ for some u from $\underline{O}$ (by the induction assumption)

   $\leftrightarrow\; x\,\epsilon^n\,y$.

□

Superstructures

Recall that the set $\underline{O}$ of objects of a complete ϵ-structure $\mathcal{S} = (\underline{O}, \epsilon)$ equals the $(\varpi+1)$-th stage of $\mathcal{S}$. In this section we provide an axiomatization for an arbitrary stage. This introduces a generalization in which the complete structures of ϵ are viewed as $(\varpi+1)$-*superstructures*.

Superstructure

By an *(abstract) superstructure* we mean an ϵ-structure $(\underline{V}, \epsilon)$ (so that $\underline{V}$ is a set of *objects* and ϵ is a relation between objects) such that the following conditions hold.

(as~1) ϵ is well-founded.

(as~2) ϵ is weakly extensional: for every x, y from $\underline{V}.\epsilon$, if $x.\ni = y.\ni$ then $x = y$.

(as~3) For every non-empty set X of objects such that $r(X) < r(\underline{V})$ (∗) there is an object x such that $x.\ni = X$.

By an α-*superstructure* we mean a superstructure $(\underline{V}, \epsilon)$ whose ϵ-rank equals α.

Note: (∗) We use $r(X)$ to refer to the ϵ-rank of a subset X of $\underline{V}$. Similarly, for an object x we let $r(x)$ be the rank of x in ϵ.

Observations:

1. The only 0-superstructure is the empty structure.
2. Every 1-superstructure is of the form $(\underline{V}, \varnothing)$ where $\underline{V}$ is non-empty.
3. $\underline{V}.\ni = \underline{V} \;\leftrightarrow\; \alpha$ is a limit ordinal or zero.
4. Axiom (as~2) can be left out if in (as~3), "an object x" is replaced by "a unique object x".
5. If $r(\underline{V})$ is a successor ordinal $\alpha+1$ then (as~3) can be replaced by a conjuction of the following conditions:

   (a) $\underline{V}.\ni$ is the set of all objects x such that $r(x) < \alpha$. (co~3) if $\alpha = \varpi$

   (b) For every subset X of $\underline{V}.\ni$ there is an object x such that $x.\ni = X$. (co~4)

   The labels on the right indicate the correspondence to axioms of complete ϵ-structures.

6. Corollary: For a structure $\mathcal{S} = (\underline{O}, \epsilon)$ the following are equivalent:
   i. $\mathcal{S}$ is an $(\varpi+1)$-superstructure.
   ii. $\mathcal{S}$ is a complete ϵ-structure.

Definitional extension

The following table shows the definitional extension of an α-superstructure $(\underline{V}, \epsilon)$.

Inheritance	$x \leq y$	$\leftrightarrow$	$x = y$ or $\emptyset \neq x.\ni \subseteq y.\ni$
Bounded inheritance	$x\ \epsilon^0\ y$	$\leftrightarrow$	$x \leq y$ and $x \in \underline{V}.\ni$
Power membership	$x\ \overline{\epsilon}\ y$	$\leftrightarrow$	$\emptyset \neq x.\ni^0 \subseteq y.\ni$
Object membership	$x\ \epsilon\ y$	$\leftrightarrow$	$x\ \epsilon\ y$ or $x\ \overline{\epsilon}\ y$
Anti-membership	$x\ \epsilon^{-1}\ y$	$\leftrightarrow$	$\emptyset \neq x.\ni \subseteq y.\ni^0$
Powerclass map	$x.ec = y$	$\leftrightarrow$	$\emptyset \neq x.\ni^0 = y.\ni$
Singleton map	$x.\varepsilon c = y$	$\leftrightarrow$	$\{x\} = y.\ni$
Union map	$x = y.\cup$	$\leftrightarrow$	$x.\ni = y.\ni^2$ and $y\ \epsilon^{-1}\ x$
Metalevel index	$x.mli$	$=$	$min\ \{i \mid x \in \underline{V}_1.\epsilon^i,\ i \in \mathbb{N}\}$
Rank	$x.d$	$=$	$sup\ \{a.d + 1 \mid a\ \epsilon\ x\}$
i-th cumulation map	$x.ec(i) = y$	$\leftrightarrow$	$x \in \underline{V}.\epsilon$ and $y = x \vee \bigvee \{x.ec(j).ec \mid j < i\}$
i-th stage	$\underline{V}_i$	$=$	$\{x \mid x.d < i\}$
$(1+i)$-th stage object	$\underline{r}_{1+i}$	$=$	$\underline{r}_1.ec(i)$ where $\underline{r}_1.\ni = \underline{V}_1 = \underline{V} \setminus \underline{V}.\epsilon$

For a natural $i > 0$, let $\epsilon^i/\overline{\epsilon}^i/\epsilon^{-i}/\epsilon^i$ be the i-th relational composition of let $\epsilon/\overline{\epsilon}/\epsilon^{-1}/\epsilon$ with itself. The 1-st stage $\underline{V}_1 = \underline{V} \setminus \underline{V}.\epsilon$ is the *ground stage* of *terminal* objects. Objects from $\underline{V}.\ni$ are *bounded*, the remaining are *unbounded*. Lifting by an additional bottom $\underline{r}_0$ is defined like for complete ϵ-structures.

Observations:

1. There is no (common) definition of inheritance root $\underline{r}$ since if α is a limit ordinal then $\underline{V} = \underline{V}.\ni$ and thus there is no object x such that $x.\ni = \underline{V}.\ni$.
2. The metalevel index function $.mli$ is defined using ϵ-levelling.
3. Definitions of $\overline{\epsilon}$ and $.ec$ are adjusted by the additional condition $\emptyset \neq x.\ni^0$. This is because in $(\alpha+2)$-superstructures, this condition is not implicitly guaranteed. (In particular, there are unbounded singletons.) As a consequence, the $.ec$ map is not total in general.
4. The i-th cumulation map $.ec(i)$ is total on $\underline{V}.\epsilon$ for every ordinal i iff α is a successor of a limit ordinal.
   - If α is a limit ordinal and $x \in \underline{V}.\epsilon$ then: $x.ec(i)$ is defined $\leftrightarrow$ $x.d + i < \alpha$.
   - In $(\alpha+2)$-superstructures, $.ec(i)$ cannot be total on $\underline{V}.\epsilon$ for $i > 1$ since $.ec$ is not total.

Embedding of superstructures

In this section we make the final preparation for the embedding of object membership into the von Neumann universe. We aim at the identification

$$(\underline{O}, \epsilon) \leftrightarrow (\mathbb{V}_{\varpi+1}, \in)$$

where $\mathbb{V}_{\varpi+1}$ is the partial von Neumann universe of all well-founded pure sets whose rank is at most ϖ. We are then interested in $(\alpha+1)$-superstructures (Z,ϵ), where α is a limit ordinal, which are "regularly embedded" into $\mathcal{S} = (\underline{O}, \epsilon)$:

- Terminals of (Z,ϵ) are singletons of $\mathcal{S}$ and have constant rank.
- All objects of (Z,ϵ) are bounded in $\mathcal{S}$, i.e. $Z \subseteq \underline{O}.\ni$. In particular, $\alpha < \varpi$.

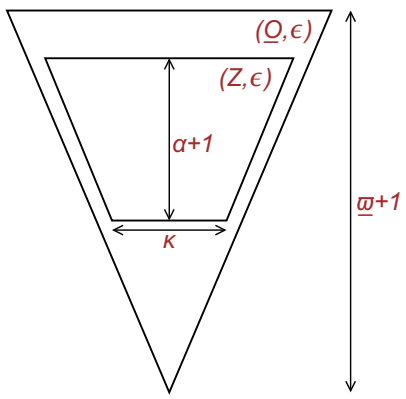

Subsequently, we can change the choice of ϖ to α and regard (Z,ϵ) as an embedded complete structure of ϵ.

In the rest of the section we assume that $\mathcal{S} = (\underline{O}, \epsilon)$ is a complete ϵ-structure (equivalently, $(\underline{\omega}+1)$-superstructure), with the definional extension introduced before.

Strata and the bottom stratum operator

For objects s, x, s is said to be a *stratum of* x if either s is terminal and $s = x$ or s is non-terminal and there is a (necessarily unique) ordinal number i such that

$s.\ni = \{ u \mid u \in x, u.d = i \}$. (That is, $s.\ni$ consists of those members of x that have rank i.)

An object is called a *stratum* if it is a stratum of itself. For an object x,

- the *bottom stratum* of x is denoted $x.\varrho$ and defined as the unique stratum of x with the least rank,
- the *height* of x is denoted $x.h$ and equals $1+i$ where i is the unique ordinal such that $x.\varrho.d + i = x.d$.

Observations:

1. For every object x,
   a. $x.\varrho$ exists and is bounded,
   b. $x.h$ exists (since $x.\varrho \le x$),
   c. $x.\varrho.\varrho = x.\varrho$ (that is, $.\varrho$ is idempotent),
   d. $x \in \underline{O}.\varrho \leftrightarrow x$ is a stratum $\leftrightarrow$ all objects from $x.\ni$ have the same rank $\leftrightarrow x.h = 1$,
   e. $x.\varrho.d$ is either zero or a successor ordinal,
   f. $x.\varrho.\ni = \{ a \mid a \in x$ and $a.d \le b.d$ for all $b \in x \}$.
2. For every ordinal $i < \underline{\omega}$, $\underline{r}_{i+1} - \underline{r}_i$ is a stratum or $\underline{r}$. Moreover, for every object s,

   s is a stratum of rank $i+1 \leftrightarrow s \le \underline{r}_{i+1} - \underline{r}_i \leftrightarrow \emptyset \ne s.\ni \subseteq \underline{V}_{i+1} \setminus \underline{V}_i$.
3. The ground stage object $\underline{r}_1$ is the bottom stratum of every stage object $\underline{r}_i$, $0 < i \le \underline{\omega}$.

Proposition:

1. $.\varrho$ and $.ec$ commute. In particular, if s is a stratum then so is $s.ec$.
2. Powerclass cumulation preserves the bottom stratum, i.e.
   - $x.\varrho = x.\mathcal{P}c(i).\varrho$ for every non-terminal object x and every non-zero ordinal i.

Proof: See the HTML version. □

Regularly cumulated objects

We say that an object b is a *(regular) cumulation base* if it is a non-terminal stratum such that

$b.\ni \subseteq \underline{T} \cup \underline{O}.\varepsilon c$. (That is, all members of b are either terminals or singletons of equal rank.)

An object z is said to be *regularly cumulated* if $z = b.\mathcal{P}c(\alpha)$ for some cumulation base b and some ordinal α.

Observations:

1. Every regularly cumulated object z has a unique cumulation base b given by

   $b = z.\varrho$. (The cumulation base of z equals the bottom stratum of z.)
2. If z is a regularly cumulated object then so is $z.\mathcal{P}c(i)$ for every ordinal i.
3. Stage objects $\underline{r}_i$, $0 < i \le \underline{\omega}$, are regularly cumulated.
4. If $b.d > 1$ then $b.u$ exists and thus $b.u.d$ refers to the ordinal predecessor of $b.d$.

Proof:

1. This is a consequence of $.\mathcal{P}c(\alpha)$ preserving the bottom stratum (proposition 2). □

Proposition: Let z be a regularly cumulated object and denote $b = z.\varrho$ its cumulation base and $Z = z.\ni$.

1. For every object x,

   $x \le z$ and $x.d < z.d \rightarrow x \in z$.
2. The following are equivalent: (i) $z \in z$ (i.e. z is fully cumulated). (ii) $z.d = \underline{\omega}$. (i.e. z is unbounded).
3. Let i be the unique ordinal such that $b.d + i = z.d$. (That is, $z.h = 1+i$ is the height of z.) Then

   $z = b.\mathcal{P}c(i)$.
4. The following closure properties are satisfied:
   a. $Z.\downarrow = Z$.
   b. $Z.\epsilon \cap Z = Z \setminus b.\ni$, that is, $b.\ni = Z \setminus Z.\epsilon$, that is, $b.\ni$ is the set of ϵ-minimal objects in (Z, ϵ).

c. $Z.\ni \cap Z = Z.\ni \setminus b.\ni^2$, that is, $(Z \setminus b.\ni).\ni \subseteq Z$.

In particular, $(Z, \epsilon, \leq)$ is a substructure of $(\underline{O}, \epsilon, \leq)$.

5. Let α_0 be such that $b.d = \alpha_0 + 1$ and let $r()$ be the rank function in the well-founded relation (Z, ϵ). Then
   a. $\alpha_0 + r(x) = x.d$ for every object x from $z.\ni = Z$,
   b. $\alpha_0 + r(x.\ni) = x.d$ for every object x from $z.\mathrm{I}$.
6. (Z, ϵ) is an α-superstructure where $\alpha = z.h$ is the height of z.

Proof: See the HTML version. □

Cardinality assertion

Proposition:

1. For every ordinal $i < \underline{\omega}$, the cardinality of $\underline{V}_{i+1} \setminus \underline{V}_i$ is at least i.
2. Let (α, κ) be a pair of non-zero ordinals such that κ is in addition a cardinal and $\kappa + \alpha < \underline{\omega}$. Then there is a regularly cumulated object z whose superstructure (Z,ϵ) (where $Z = z.\ni$) has the following properties:
   - The rank of (Z,ϵ) equals α.
   - The cardinality of the ground stage $Z \setminus Z.\epsilon$ equals κ.

Proof: See the HTML version. □

Embedded $(\alpha+1)$-superstructure

Proposition: Let z be a regularly cumulated object of height $\alpha+1$ where α is a limit ordinal. Denote $Z = z.\ni$. Assume that $z.u$ exists. Then the following table describes a definitional extension of the $(\alpha+1)$-superstructure (Z,ϵ). (The "z" subscript is used to distinguish between definitional extensions of (Z,ϵ) and $(\underline{O},\epsilon)$.)

Inheritance root	r	$=$	$z \wedge z.u$	$r.\ni =$	$Z \cap Z.\ni$
Ground stage object	b	$=$	$z - r.ec$	$b.\ni =$	$Z \setminus r.\mathrm{I}$
For every x, y from Z :					
Inheritance	$x \leq_z y$	$\leftrightarrow$	$x \leq y$	$\leftrightarrow$	$x.\ni \subseteq y.\ni$
Union map	$x = y.u_z$	$\leftrightarrow$	$x = y.u$	$\leftrightarrow$	$x.\ni = y.\ni^2$
Singleton map	$x.\varepsilon c_z = y$	$\leftrightarrow$	$x.\varepsilon c = y$	$\leftrightarrow$	$\{x\} = y.\ni$
Powerclass map	$x.ec_z = y$	$\leftrightarrow$	$r \wedge x.ec = y$	$\leftrightarrow$	$r.\ni \cap x.\mathrm{I} = y.\ni$
Rank	$b.u.d + x.d_z$	$=$	$x.d$		

Proof: See the HTML version. □

Embedded basic structure

Proposition: Let again z be a regularly cumulated object of height $\alpha+1$ where α is a limit ordinal, $z.u$ exists and $Z = z.\ni$. Assume in addition that $\mathcal{S}_0 = (O, \ldots)$ is a basic structure (of rank $\alpha+1$) such that (Z,ϵ) is a faithful extension of $\mathcal{S}_0$. Let T be the set of terminals of $\mathcal{S}_0$ and r the inheritance root. Then

$T = (O.\ni \setminus O).\varepsilon c \cap O$ (the set of terminal objects of $\mathcal{S}_0$),

$r.\ni = O.\ni \setminus T.\ni$ (the inheritance root of both $\mathcal{S}_0$ and (Z,ϵ)),

$Z = r.\ni \cup r.\mathrm{I}$ (i.e. $z = r \vee r.ec = r.\mathrm{e}c$).

In particular, Z is given by O (in the ambient $(\underline{\omega}+1)$-superstructure $(\underline{O}, \epsilon)$). The definitional extension of (Z,ϵ) described in the previous subsection is applicable to $\mathcal{S}_0$.

Proof: See the HTML version. □

Embedding into the von Neumann universe of sets

In this section we provide the final embedding of bounded object membership ϵ into set membership $\in$ between well-founded sets. If not stated otherwise, we will use the term "class" in the sense of set theory as a collection of sets. Let $\mathbb{V}$ denote the universal class and assume the ZFC axiom of foundation (a.k.a. axiom of regularity):

- for every non-empty set x, there exists $a \in x$ such that $a \cap x = \emptyset$.

As a consequence, $\mathbb{V}$ coincides with the von Neumann universe of well-founded sets. Note that the axiom says that $(\mathbb{V}, \in)$ is a well-founded relation provided that we extend the definition of well-foundedness to proper classes.

In addition to the standard *powerset* operator $\mathbb{V} \to \mathbb{V}$ which is denoted by $\mathbb{P}$ we define two "sub-operators", $\mathbb{P}_+$ and $\mathbb{P}_1$. For every set x, let

$\mathbb{P}_+(x) = \mathbb{P}(x) \setminus \{\emptyset\}$ ($\mathbb{P}_+(x)$ is the set of non-empty subsets of x),

$\mathbb{P}_1(x) = \{ \{u\} \mid u \in x \}$ ($\mathbb{P}_1(x)$ is the set of singleton subsets of x).

For a natural number i we let $\mathbb{P}^i$ denote the i-th power of $\mathbb{P}$ in the usual sense (i.e. $\mathbb{P}^0(x) = x$ and $\mathbb{P}^{i+1}(x) = \mathbb{P}(\mathbb{P}^i(x))$). Similarly with $\mathbb{P}_+$ and $\mathbb{P}_1$.

Powerset cumulation

For every ordinal α, the *α-th (powerset) cumulation* is denoted $\mathbb{P}_\star^\alpha$ and defined recursively as an operator $\mathbb{V} \to \mathbb{V}$ by

$\mathbb{P}_\star^0(x) = x$,

$\mathbb{P}_\star^\alpha(x) = x \cup \mathbb{P}_+(\mathbb{P}_\star^{\alpha-1}(x))$ if α is a succesor ordinal,

$\mathbb{P}_\star^\alpha(x) = \bigcup \{ \mathbb{P}_\star^\beta(x) \mid \beta < \alpha \}$ if α is a limit ordinal.

By a single recursive formula,

$\mathbb{P}_\star^\alpha(x) = x \cup \bigcup \{\mathbb{P}_+(\mathbb{P}_\star^\beta(x)) \mid \beta < \alpha \}$ (the *α-th cumulation* of x).

Note: We deviate from standard definitions [2] [8] by using $\mathbb{P}_+$ instead of $\mathbb{P}$ in the above formulae. A correspondence is then obtained by a substitution $x \mapsto x \cup \{\emptyset\}$.

- In [2], $\mathbb{P}_\star^\omega(x \cup \{\emptyset\})$ is called the *superstructure* over x.
- In [8], $\mathbb{P}_\star^\alpha(x \cup \{\emptyset\})$ is called an *α-superstructure* (for infinite α).

The von Neumann hierarchy

The von Neumann universe $\mathbb{V}$ is the class of all well-founded sets. If the axiom of foundation is not assumed and $\mathbb{U}$ denotes the universal class of all sets, then $\mathbb{V}$ is obtained as a subclass of $\mathbb{U}$ by transfinite recursion via the cumulative hierarchy of sets $\mathbb{V}_\alpha$:

$\mathbb{V}_\alpha = \bigcup \{ \mathbb{P}(\mathbb{V}_\beta) \mid \beta < \alpha \}$, that is, $\mathbb{V}_0 = \emptyset$,

$\mathbb{V}_\alpha = \mathbb{P}(\mathbb{V}_{\alpha-1})$ if α is a successor ordinal,

$\mathbb{V}_\alpha = \bigcup \{ \mathbb{V}_\beta \mid \beta < \alpha \}$ if α is a limit ordinal,

$\mathbb{V} = \bigcup \{ \mathbb{V}_\alpha \mid \alpha \in \mathrm{On} \}$.

The axiom of foundation can be expressed as $\mathbb{V} = \mathbb{U}$. The *rank* function $r()$ on $\mathbb{V}$ is defined by

- $r(x) = \alpha \;\leftrightarrow\; x \in \mathbb{V}_{\alpha+1} \setminus \mathbb{V}_\alpha$.

$\mathbb{V}_\alpha$ then contains exactly the sets x such that $r(x) < \alpha$.

Proposition: For every ordinal α, the following are satisfied:

1. $\mathbb{V}_{1+\alpha} = \mathbb{P}_\star^\alpha(\{\emptyset\})$.
2. $(\mathbb{V}_\alpha, \in)$ is an α-superstructure whose ground stage equals $\{\emptyset\}$ (whenever $\alpha > 0$).
3. For every non-terminal bounded object x of $(\mathbb{V}_\alpha, \in)$, the powerclass of x equals $\mathbb{P}_+(x)$.

The set-representation theorem

Theorem:
Every basic structure $\mathcal{S}_0 = (\underline{O}_0, \ldots)$ can be represented as a well-founded set $\underline{O}$ according to the following table. In particular, there is a set $\underline{V}$ such that

- $(\underline{V}, \in)$ is a complete ϵ-structure such all elements of the ground stage $\underline{V}_1$ are singleton sets of equal rank,
- $\mathcal{S}_0$ is faithfully embedded into $(\underline{V}, \in)$.

Terminal objects	$\underline{T}$	$=$	$\underline{O} \cap \mathbb{P}_1(\bigcup \underline{O} \setminus \underline{O})$
Inheritance root	$\underline{r}$	$=$	$\bigcup \underline{O} \setminus \bigcup \underline{T}$
For every x, y from $\underline{O}$:			
Bounded membership	$x \epsilon y$	$\leftrightarrow$	$x \in y$
Inheritance	$x \leq y$	$\leftrightarrow$	$x \subseteq y$
Singleton map	$x.\varepsilon c = y$	$\leftrightarrow$	$\{x\} = y$
Powerclass map	$x.ec = y$	$\leftrightarrow$	$\underline{r} \cap \mathbb{P}(x) = y$
Power membership	$x \overline{\epsilon} y$	$\leftrightarrow$	$\underline{r} \cap \mathbb{P}(x) \subseteq y$
Object membership	$x \epsilon y$	$\leftrightarrow$	$\underline{r} \cap \mathbb{P}(x) \subseteq y$ or $x \in y$
Anti-membership	$x \epsilon^{-1} y$	$\leftrightarrow$	$\underline{r} \cap \mathbb{P}(y) \supseteq x$
Complete extension $(\underline{V}, \in)$			
Last stage	$\underline{V}$	$=$	$\underline{r} \cup \mathbb{P}_+(\underline{r})$
Ground stage	$\underline{V}_1$	$=$	$\underline{V} \setminus \mathbb{P}(\underline{r})$
Ground rank	α_0	$=$	$r(\bigcup \underline{V}_1)$
The i-th stage	$\underline{V}_i$	$=$	$\underline{V} \cap \mathbb{V}_{\alpha_0+i}$
The i-th metalevel ($i < \omega$)		$=$	$\mathbb{P}^i(\underline{r}) \setminus \mathbb{P}^{i+1}(\underline{r})$
Union map	$x.u$	$=$	$\bigcup x$

Proof:
Proceed in the following steps:

i. Let $\mathcal{S}_0 = (\underline{O}_0, \ldots)$ be a basic structure of ϵ.
ii. Let $\mathcal{S}_1 = (\underline{O}_1, \ldots)$ be a completion of $\mathcal{S}_0$. Express $\mathcal{S}_1$ as an ϵ-structure $(\underline{O}_1, \epsilon)$.
iii. Let i be the cardinality of the ground stage of $\mathcal{S}_1$.
iv. Let $\alpha = i + \underline{\varpi} + \omega$.
v. Let $\underline{V}$ be a regularly cumulated object in the $(\alpha+1)$-superstructure $(\mathbb{V}_{\alpha+1}, \in)$ such that
   - the rank of $(\underline{V}, \in)$ equals $\underline{\varpi}+1$,
   - the cardinality the ground stage of $(\underline{V}, \in)$ equals i,
   - $\varnothing \notin \underline{V}$ (this is implicitly satisfied for $i \neq 1$).
vi. Let $.v$ be an isomorphism between $(\underline{O}_1, \epsilon)$ and $(\underline{V}, \in)$.
vii. Let $\underline{O}$ be the set $\underline{O}_0.v$.

The existence of $\mathcal{S}_1$ follows by the completion theorem. The existence of $\underline{V}$ follows by the cardinality assertion. (The roles of α and $\underline{\varpi}$ are exchanged.) The equivalences and equalities stated in the table follow from the equalities

$$x.ec_V = \mathbb{P}_+(x), \quad x.u_V = \bigcup x,$$
$$x.\varepsilon c_V = \{x\}, \quad X.\varepsilon c_V = \mathbb{P}_1(X)$$

which hold in the $(\alpha+1)$-superstructure $(\mathbb{V}_{\alpha+1}, \in)$ for every sets x and X that are both elements and subsets of $\mathbb{V}_\alpha \setminus \{\varnothing\}$. (The equalities show the correspondence between set theoretic notation and the abstract notation of superstructures so that the last two propositions of the previous section can be applied. In addition, we have used $\mathbb{P}$ instead of $\mathbb{P}_+$ in the table where applicable.) □

Union in basic structures ⊤

Consider the definitional extension of a complete structure $\mathcal{S} = (\underline{O}, \epsilon)$. The following table suggests that the union map $.\upsilon$ is another candidate to be introduced into basic structures by abstraction, just like $.ec$ and $.\varepsilon c$.

Power membership	$(\bar{\epsilon}) = (.ec) \circledcirc (\leq)$ ($x.ec$ is the least power container of x)
Bounded membership	$(\epsilon) = (.\varepsilon c) \circledcirc (\leq)$ ($x.\varepsilon c$ is the least bounded container of x)
Anti-membership	$(\epsilon^{-1}) = (.\upsilon) \circledcirc (\leq)$ ($x.\upsilon$ is the least anti-container of x)

We have already observed that in complete structures, $(\epsilon^{-1}) \cap (\ni)$ is a subrelation (thus a submap) of $.\upsilon$ (which is in turn a subrelation of ϵ^{-1}). This suggests to regard $(\epsilon^{-1}) \cap (\ni)$ as the implicit part of the abstraction of $.\upsilon$ in basic structures. We let the complementary, explicit part of $.\upsilon$ be denoted by $.\varpi$ and call it the *non-member union* map. The situation is then summarized by the following table. (We can already consider the table to apply to the general case of basic structures, with "Domain" replaced by "Potential domain".)

Map between objects		Domain	Map parts	
			Implicit	Explicit
Powerclass map	$.ec$	$\underline{O}$	$\varnothing$	$.ec = (\bar{\epsilon}) \cap (\ni^{-1})$
Singleton map	$.\varepsilon c$	$\underline{O}.\ni$	$(.\varepsilon c) \cap (.ec)$	$.\varepsilon\!\not\!c = (.\varepsilon c) \setminus (\bar{\epsilon})$ (primary singleton map)
Union map	$.\upsilon$	$\underline{O}.\ni^{-1}$	$(\epsilon^{-1}) \cap (\ni)$	$.\varpi = (.\upsilon) \setminus (\ni)$ (non-member union map)

The (b~9) axiom

The corresponding generalization of basic structures would be based on $\epsilon 6$-structures (instead of $\epsilon 5$-structures) which would contain $.\varpi$ as an additional constituent of the signature. The presumed axiomatization of $.\varpi$ is established by the "reserved" (b~9) axiom which is shown below together with the similar axiom (b~8).

(b~8) If $x.\varepsilon\!\not\!c = y$ then: (a) $\{x\} = y.\ni$, (b) $x.\epsilon^i = y.\epsilon^{i-1}$ for every $i \leq 1$, (c) $(x,y) \notin (\bar{\epsilon})$.

(b~9) If $x = y.\varpi$ then: (a_1) $x.\bar{\ni} = y.\ni.\bar{\ni}$, ($a_2$) $x.\ni = y.\ni^2$, (b) $x.\epsilon^i = y.\epsilon^{i-1}$ for every $i \leq 0$, (c) $(x,y) \notin (\epsilon)$.

Subsequently, the *union map*, $.\upsilon$, is defined as a partial map between objects by

- $x = y.\upsilon \quad \leftrightarrow \quad \{x\} = (y.\epsilon^{-1} \cap y.\ni) \cup \{y\}.\varpi$.

We say that $\mathcal{S}$ is

union complete if $x.\upsilon$ is defined for every object x from $\underline{O}.\ni^{-1}$.

The domains of ϵ^{-1} and of $(\epsilon^{-1}) \setminus (\ni)$ are the *potential domains* of $.\upsilon$ and $.\varpi$, respectively. We let the integer powers, inverses and transitive closures of $.\upsilon$ and $.\varpi$ be denoted and defined in a similar way to that of $.ec$. The 0-th powers are identities on the respective potential domain.

Observations: Assume axioms of pre-basic structures.

1. $(\epsilon^{-1}) \cap (\ni)$ is a partial map between objects.
2. Every pair (y,x) from $(\epsilon^{-1}) \cap (\ni)$ satisfies conditions (b~9)(a_1)(a_2)(b).
3. If, in addition, (b~9) is assumed then for every objects x, y,
   $x = y.\upsilon \rightarrow 1 + x.mli = y.mli$.

Proof:

1. Assume $y\,\epsilon^{-1}\,x\,\epsilon\,y$ and $y\,\epsilon^{-1}\,x'\,\epsilon\,y$. Then (a) $x\,\epsilon\,y\,\epsilon^{-1}\,x'$ and (b) $x'\,\epsilon\,y\,\epsilon^{-1}\,x$ so that (a) $x \leq x'$ and (b) $x' \leq x$.
2. Assume $y\,\epsilon^{-1}\,x\,\epsilon\,y$. Then:
   (a_1) $x.\bar{\ni} = y.\ni.\bar{\ni}$: $a\,\bar{\epsilon}\,b\,\epsilon\,y \rightarrow a\,\bar{\epsilon}\,b\,\epsilon\,y\,\epsilon^{-1}\,x \rightarrow a\,\bar{\epsilon}\,b \leq x \rightarrow a\,\bar{\epsilon}\,x$.
   (a_2) $x.\ni = y.\ni.\ni$: (The same proof with "$\bar{\epsilon}$" replaced by "ϵ".)
   (b) $x.\epsilon^i = y.\epsilon^{i-1}$ for every $i \leq 0$: $x\,\epsilon^i\,a \rightarrow y\,\epsilon^{-1}\,x\,\epsilon^i\,a \rightarrow \underline{y\,\epsilon^{i-1}\,a} \rightarrow x\,\epsilon\,y\,\epsilon^{i-1}\,a \rightarrow x\,\epsilon^i\,a$.
3. This is a consequence of (b~9)(b). □

Rank adjustment

The diagram on the right shows that the (old) definition of the rank function $.d$ is no longer acceptable since the $.\varpi$ map adds new constraints to it. The purple arrow indicates that $a = b.\varpi$. We consider the diagram to show

two structures: $\mathcal{S}_0$ and its extension $\mathcal{S}$ with the dashed part being the difference. Since $a.d$ is finite (and thus a non-limit ordinal) a faithful interpretation of $.d$ should assert that $a.d + 1 = b.d$. However, this is only satisfied in the $\mathcal{S}$ structure. In $\mathcal{S}_0$, $a.d_0 = b.d_0 = 2$ (according to the not-yet-adjusted definition of the rank function).

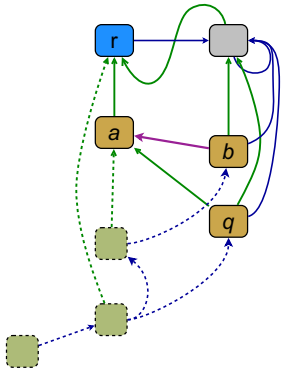

The following is an unverified proposal for the definition of the rank function $.d$ in an $\in 6$-structure $\mathcal{S} = (\underline{O}, \in, \ldots, .\varpi)$.

1. Define *path membership* to be a system $\mathcal{E} = \{\mathcal{E}^i \mid i \in \mathbb{Z}\}$ of relations between objects generated by the following rules.
   a. $(\mathcal{E}^i) \circledast (\mathcal{E}^j) \subseteq (\mathcal{E}^{i+j})$ for every integers i, j.
   b. $(\in^i) \subseteq (\mathcal{E}^i)$ for every integer i.
   c. $(.\varpi) \subseteq (\mathcal{E}^{-1})$.
2. Define *path-ranking product* to be a structure $(\underline{O}_1, \in)$ where $\underline{O}_1$ equals $(\underline{O} \uplus \{\text{ƀ}\}) \times \mathbb{N}$ (with ƀ standing for a fictitious terminal object) and $\in$ is a relation on $\underline{O}_1$ such that for every objects x,y and every natural i, j,
   - $(x,i) \in (y,j) \quad \leftrightarrow \quad x\ \mathcal{E}^{1+i-j}\ y$,
   - $(\text{ƀ},i) \in (y,j) \quad \leftrightarrow \quad 1+i-j = y.mli$,
   - $(\text{ƀ},i) \in (\text{ƀ},j) \quad \leftrightarrow \quad 1+i-j = 0$,
   - $(x,i) \in (\text{ƀ},j) \quad \leftrightarrow$ false.
3. For every object x, let $x.d$ be the ϖ-limited rank of $(x,0)$ in $(\underline{O}_1, \in)$.

Union 1-completion

The below is a prescription for equipping a basic structure with missing union objects. Since new objects have $.\varpi$ undefined we speak about *1-completion*.

Let $\mathcal{S} = (\underline{O}, \in, \ldots)$ be an $\in 6$-structure and $\mathcal{S}_0 = (\underline{O}_0, \in_0, \ldots, .\varpi_0)$ a basic $\in 6$-structure. We say that $\mathcal{S}$ is a *union 1-completion* of $\mathcal{S}_0$ if $\mathcal{S}$ is an extension of $\mathcal{S}_0$ such that the following are satisfied:

1. $(.ec) = (.ec_0)$, $(.\varepsilon_0) = (.\varepsilon_0)$, and $\underline{O}.\varpi(-1) = \underline{O}_0.\varpi_0(0)$.
2. $(.\varpi) \setminus (.\varpi_0)$ is injective. (That is, for every new object x there is exactly one old object y such that $x = y.\varpi$.)
3. $(.\varpi) \setminus (.\varpi_0)$ is defined according to the following table. We assume that a, b are old objects. In (i) we assume that $a.\varpi$ and $b.\varpi$ are defined and new, in (ii) we assume that $a.\varpi$ is defined and new in (iii) we assume that $b.\varpi$ is defined and new.

	(α)				(β)			(γ) ($i \in \mathbb{N}$)		
i	$a.\varpi \in b.\varpi$	$\leftrightarrow$	$b \in a.\in^{-1}.\overline{\in}.\in$	$\leftrightarrow$	$a.\varpi\ \overline{\in}\ b.\varpi$			$a.\varpi\ \overline{\in}^{-i}\ b.\varpi$	$\leftrightarrow$	$b \in a.\overline{\in}^{-i} \cup a.\overline{\in}^{-i-1}.\in$
ii	$a.\varpi \in b$	$\leftrightarrow$	$b \in a.\in^{-1}.\overline{\in}$	$\leftrightarrow$	$a.\varpi\ \overline{\in}\ b$			$a.\varpi\ \overline{\in}^{-i}\ b$	$\leftrightarrow$	$b \in a.\overline{\in}^{-i-1}$
iii	$a \in b.\varpi$	$\leftrightarrow$	$b \in a.\in^2$		$a\ \overline{\in}\ b.\varpi$	$\leftrightarrow$	$b \in a.\overline{\in}.\in$	$a\ \overline{\in}^{-i}\ b.\varpi$	$\leftrightarrow$	$b \in a.\overline{\in}^{-i+1} \cup a.\overline{\in}^{-i}.\in$

Completion conjecture

Conjecture: The completion theorem holds also for basic structures with the union map (i.e. $\in 6$-structures satisfying (b~1)–(b~11) with an adjusted definition of $.d$). More specifically,

1. If $\mathcal{S}$ and $\mathcal{S}_0$ are as in the union 1-completion then $\mathcal{S}$ is a basic structure that is a faithful extension of $\mathcal{S}_0$.
2. Every basic structure $\mathcal{S}_0$ has a union completion which is the limit of ω union 1-completions.
3. The powerclass completion theorem is "preserved".
4. The (primary) singleton completion theorem is "preserved".
5. The extensional pre-completion theorem is "preserved".
6. Rank pre-completion theorem holds if the rank-precompletion also includes powerclass completion.
7. In the axiomatization of pre-complete structures, powerclass consistency follows from union completeness.
8. Embedding of pre-complete structures into complete structures preserves the union map.

References

[1] Luca Cardelli, ***Structural Subtyping and the Notion of Power Type***, Proc. of the 15th ACM Symp. on Principles of Programming Languages, POPL'88, 1988, http://www.daimi.au.dk/~madst/tool/tool2004/papers/structural.pdf

[2] C. C. Chang, H. Jerome Keisler, ***Model Theory***, Studies in Logic and the Foundations of Mathematics (3rd ed.), Elsevier, 1990,

[3] B.A. Davey, H.A. Priestley, ***Introduction to lattices and order***, Cambridge University Press 2002

[4] Kees Doets, ***Basic model theory***, Stanford: CLSI Publications, 1996,

[5] Thomas Jech, ***Set theory: the third millennium edition***, Springer, 2003

[6] Vladimir Kanovei, Michael Reeken, ***Nonstandard analysis, axiomatically***, Springer, 2004

[7] John L. Kelley, ***General Topology***, Springer 1975

[8] Mauro Di Nasso, ***Pseudo-superstructures as nonstandard universes***, The Journal of Symbolic Logic 63.01, 1998

[9] Ondřej Pavlata, ***Object Membership: The Core Structure of Object Technology***, 2012–2015, http://www.atalon.cz/om/object-membership/

[10] Ondřej Pavlata, ***Object Membership: The Core Structure of Object-Oriented Programming***, 2012–2015, http://www.atalon.cz/om/object-membership/oop/

[11] Ondřej Pavlata, ***Object Membership with Prototypes***, 2015, http://www.atalon.cz/om/object-membership/prototypes/

[12] Ondřej Pavlata, ***Object Membership and Powertypes***, 2015, http://www.atalon.cz/om/object-membership/powertypes/

[13] Judith Roitman, ***Introduction to Modern Set Theory***, Orthogonal Publishing L3C, 2011, http://www.math.ku.edu/~roitman/SetTheory.pdf

[14] Jean E. Rubin, ***Set theory for the mathematician***, Holden-Day, 1967,

[15] ***Wikipedia: The Free Encyclopedia***, http://wikipedia.org
[15a] Von Neumann universe , [15b] Club set

License